PLAN OF PROPOSED IMPROVEMENTS: City of Holy Cross Subdivision No.2

Bid Date : 11/26/2012

F:\ACAD\HX0789\dwg\hx0789-cov.dwg 11-09-12 10:35:09 AM Ben Antons

PLAN OF PROPOSED IMPROVEMENTS
FOR

City of Holy Cross Subdivision No.2

Holy Cross, IOWA

UTILITY & EMERGENCY PHONE NUMBERS

EMERGENCY	911
WATER DEPARTMENT	(563) 870-2475
SEWER MAINTENANCE DEPARTMENT	(563) 870-2475
IOWA ONE CALL (UTILITIES)	1-800-292-8989
IOWA TELECON	(877) 901-4692
ALLIANT ENERGY	(877) 740-5050
CABLE TV	
NEW CENTURY COMMUNICATIONS	(800) 248-8007

LOCATION MAP

(NOT TO SCALE)

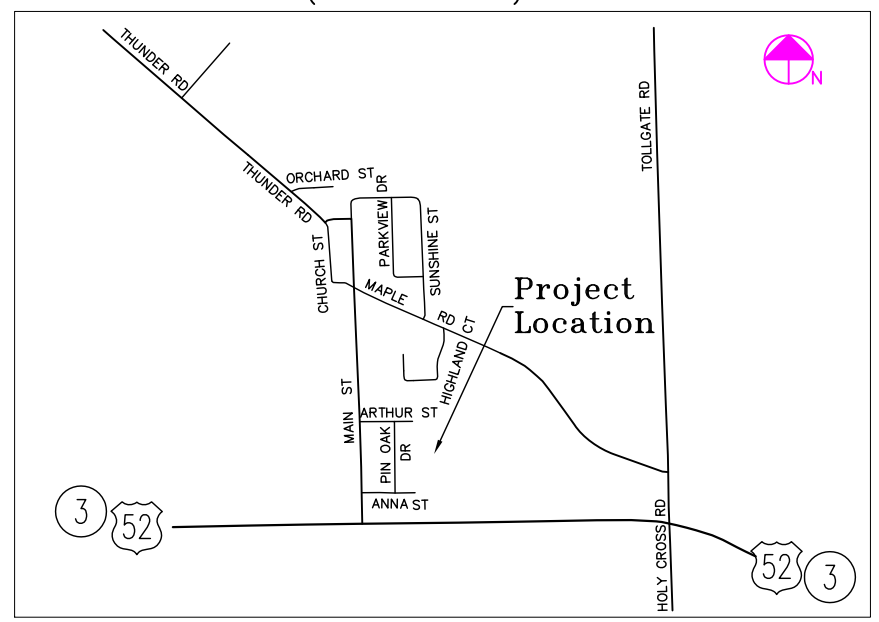

SHEET INDEX

A.01	Cover
B.01–B.17	Legend, Standard Details, And Bench Mark Information
C.01–C.02	Tabulations
C.03	Overall Plan
C.04	Grading Plan
C.05	Stormwater Pollution Prevention Plan
C.06	Typical Sections
D.01–D.05	Storm Sewer – Plan and Profile
E.01–E.03	Sanitary Sewer – Plan and Profile
F.01	Intersection Geometrics
X.01–X.04	Cross Sections–Arthur Street
Y.01–Y.07	Cross Sections–Hickory Lane
Z.01–Z.04	Cross Sections–Anna Street

NOTE: Contractor to schedule meeting with City of Holy Cross prior to any construction activity.

Date Submitted: 11/30 /07
Date Revised: 10/19/2012

Owner:	City of Holy Cross, Iowa
Telephone Number:	(563) 870-2475
Mailing Address:	938 Church Street Holy Cross, IA 52053

CONTACT PERSON:	Ghassan El-Farhan Halloush, P.E.
TELEPHONE NUMBER:	319-393-8726
FAX NUMBER	319-393-6858
MAILING ADDRESS:	4403 1st Ave S.E. STE 301 CEDAR RAPIDS, IA 52402

ALLTRANS, INC.
4403 1st Avenue S.E.
Cedar Rapids, Iowa 52402
Phone: (319) 393-8726

I hereby certify that this Engineering document was prepared by me or under my direct personal supervision and that I am a duly Licensed Engineer under the laws of the State of Iowa.

Ghassan El-Farhan Halloush, Iowa Reg. No. 14834

My License renewal date is December 31, 2012

Pages covered by this seal: _____

CITY APPROVAL

CITY OF HOLY CROSS, IOWA

The plan of improvements upon which this stamp is affixed have been

APPROVED

By _____

Checked By _____ Date _____

LEGEND

Existing		Proposed
	ACC / PCC / Curb	
	Gravel / Drive / Sidewalk	
	Building	
	Centerline	
(C)	CATV	C
(E)	Electric (Underground)	E
(OHE)	Electric (Overhead)	OHE
(F)	Fiber Optic Cable	F
(SS)	Force Main	FM
(G)	Gas	G
(SS)	Sanitary Sewer (Size Unknown)	FM
(6" SS)	6" Sanitary Sewer	6" SS
(8" SS)	8" Sanitary Sewer	8" SS
(ST)	Storm Sewer (Size Unkown)	ST
(6" ST)	6" Storm Sewer	6" ST
(12" ST)	12" Storm Sewer	12" ST
	Subdrain	
(S)	Steam	S
(T)	Telephone	T
(W)	Water (Size Uknown)	W
(8" W)	8" Water	8" W
(10" W)	10" Water	10" W
x	Fence	x
	Wall	
ROW	Right of Way	ROW
	Utility Easement	
	Temporary Construction Easement	
	Boundary Line	
	Adjoining Lot Line	
	Section Line	
	Proposed Property Lot Line	
	Building Setback	
	Grading Limits	

LEGEND

Existing		Proposed
	Light Pole w/o Mast	
	Fire Hydrant	
	Utility Pole	
	Guy Anchor	
	Telephone Pedestal	
	Handhole	
	Utility/Control Cabinet	
	Drainage/Sanitary/Utility Manhole	
OR	Grate Intake	OR
	101 B Intake	
	104B Intake	
	RA–3 or RA–5 Intake	
	RA–6 Intake	
	RA–8 Intake	
	Valve, Water or Gas	
	Valve Manhole	
	Cleanout, Storm or Sanitary	
	Water Blowoff	
	Flared End Section	
BM #	Benchmark	BM #
B #	Soil Boring	B #
	Light Pole w/ Mast	
	Traffic Signal	
	Mailbox	
	Bollard	
C	CATV Pedestal	C
	Sign	<
W	Well	W
	Deciduous Tree	
	Coniferous Tree	
	Bush	

BENCH MARKS

#1. N.E. Corner of Intersection of Arthur Street and Pin Oak Street
"X" in Hydrant,
Elevation= 523.51

#2. 100' West of N.W. Corner of Intersection of Hickory Street and Anna Street
"X" in Hydrant,
Elevation= 503.80

F:\ACAD\HX0789\dwg\hx0789-B1.dwg 10-12-12 09:54:33 AM Ben Antons

PROJECT NO: HX0789	DRAWN BY: BGA APPROVED BY: GMH DATE: 10/10/2012	NO. REVISION DESCRIPTION	APPROVED	DATE

ALLTRANS, INC.
4403 1st Avenue S.E.
Cedar Rapids, Iowa 52402
Phone: (319) 393-8726

City of Holy Cross Subdivision No.3
Dubuque County, Iowa

Legend, Standard Details, And Bench Mark Information

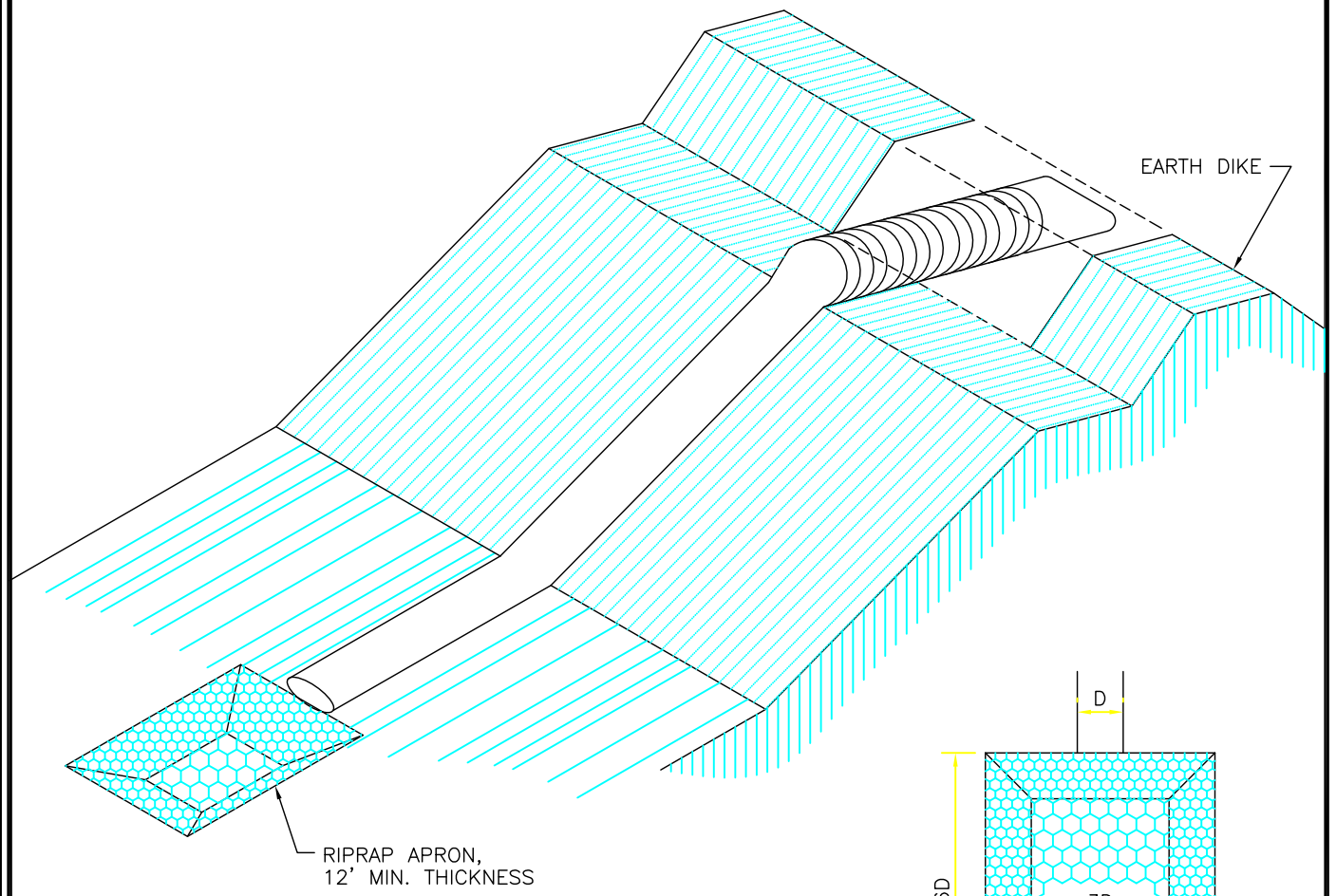

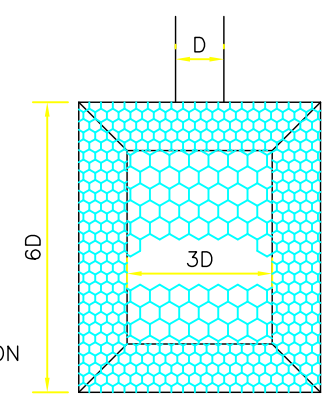

RIPRAP APRON PLAN

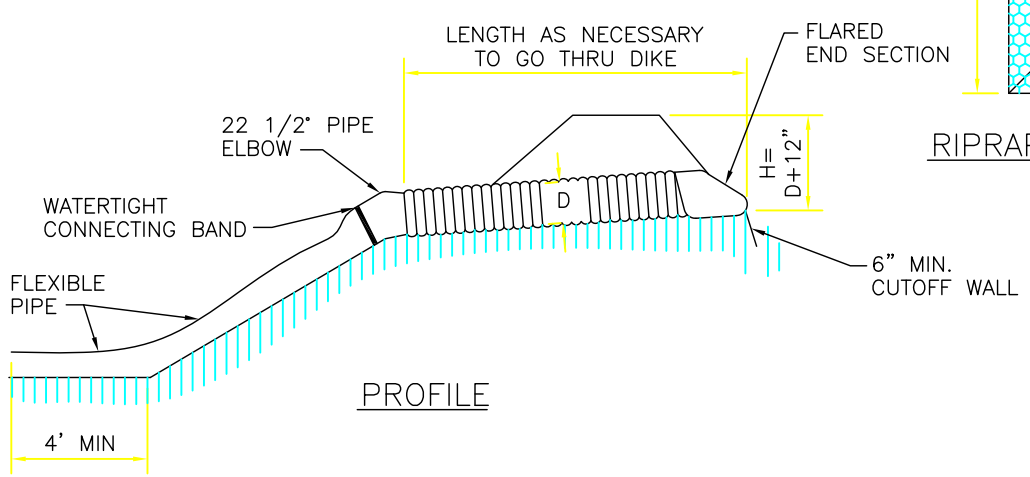

PROFILE

NOTE:

FLEXIBLE TUBING WILL BE SECURED WITH HOLD-DOWN GROMMETS ON 10 FOOT CENTERS.

FILE NO.: 1300-024	CEDAR RAPIDS METROPOLITAN AREA STANDARD DETAILS FOR PUBLIC IMPROVEMENTS
APPROVAL DATE: JUNE 1999	
REVISION NO.:	GRADE STABILIZATION STRUCTURE
REVISION DATE:	NO. 1300-024

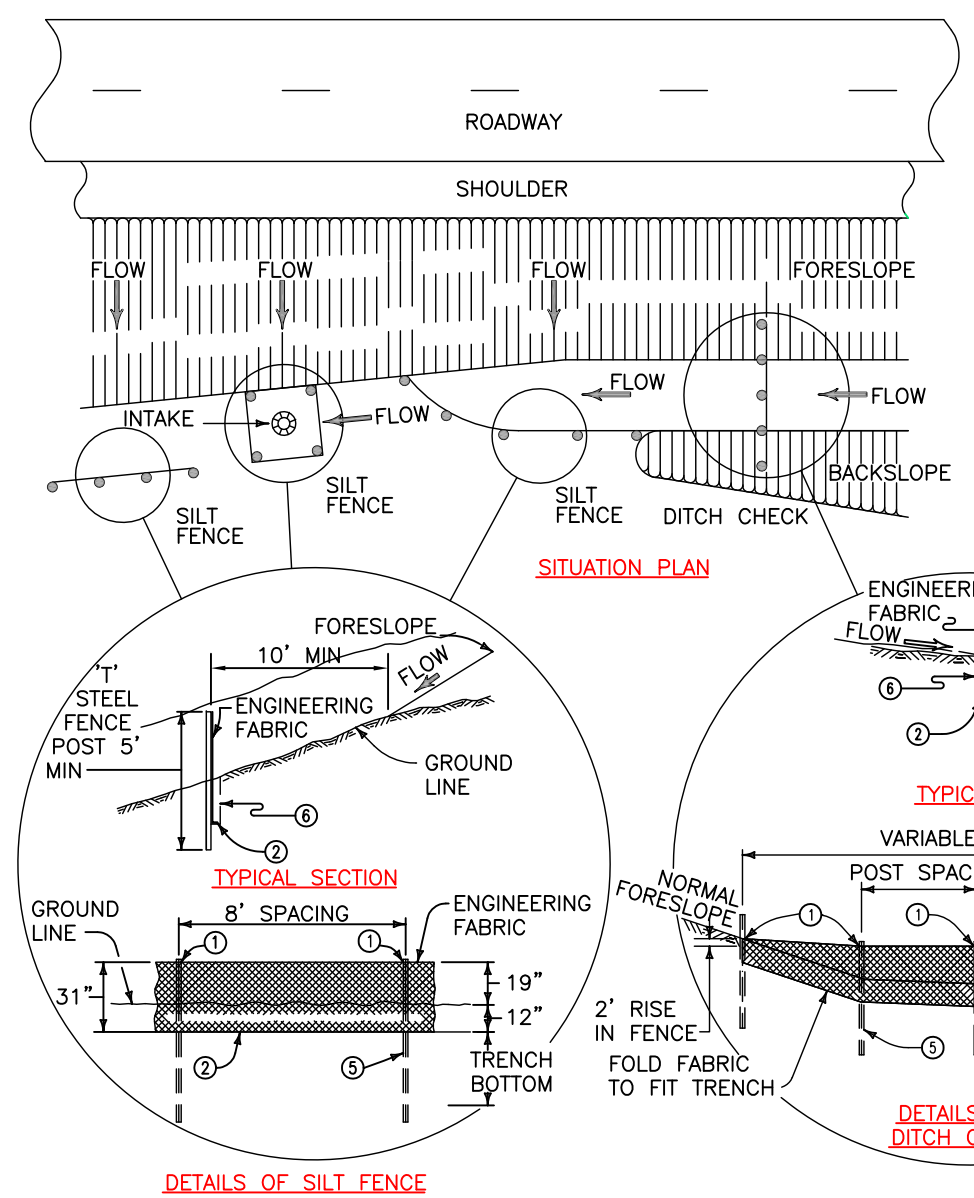

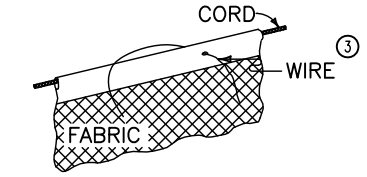

BACK VIEW OF FABRIC

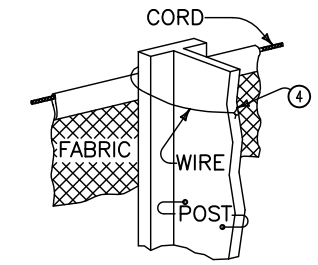

BACK VIEW
ATTACHMENT TO POST

1. SECURE TOP OF ENGINEERING FABRIC TO STEEL POST, SEE DETAIL OF ATTACHMENT TO POST.
2. ENGINEERING FABRIC TO BE FOLDED ACROSS THE BOTTOM OF THE TRENCH.
3. MAKE VERTICAL CUT IN TOP FOLD AREA OF FABRIC. PULL OUT AND TWIST CORD.
4. LOOP CORD AROUND POST FORMING A LOOP. PULL WIRE THROUGH FOLD AREA OF FABRIC AND SECURE AROUND POST.
5. STEEL POST TO BE EMBEDDED 24" BELOW TRENCH BOTTOM.
6. 12" DEEP X 4" WIDE MINIMUM TRENCH, BACKFILL TO BE COMPACTED IN TWO LIFTS.
7. WIDTH OF DITCH CHECKS SHALL BE SUCH AS TO RUN TOP OF FENCE INTO THE DITCH SIDE SLOPE.
8. TOP OF END POST OF DITCH CHECKS SHALL BE 1-FT NOMINAL ABOVE GROUND LINE.

FILE NO.: 1300-020	CEDAR RAPIDS METROPOLITAN AREA STANDARD DETAILS FOR PUBLIC IMPROVEMENTS
APPROVAL DATE: AUG 1999	
REVISION NO.:	SILT FENCE
REVISION DATE:	NO. 1300-020

F:\ACAD\HX0789\dwg\HX0789-B2.dwg 10-25-12 10:43:17 AM Ben Antons

PROJECT NO: HX0789	DRAWN BY: BGA APPROVED BY: GMH DATE: 10/10/2012	NO. / REVISION DESCRIPTION / APPROVED / DATE	

ALLTRANS, INC.
4403 1st Avenue S.E.
Cedar Rapids, Iowa 52402
Phone: (319) 393-8726

City of Holy Cross Subdivision No.3
Dubuque County, Iowa

Legend, Standard Details, And Bench Mark Information

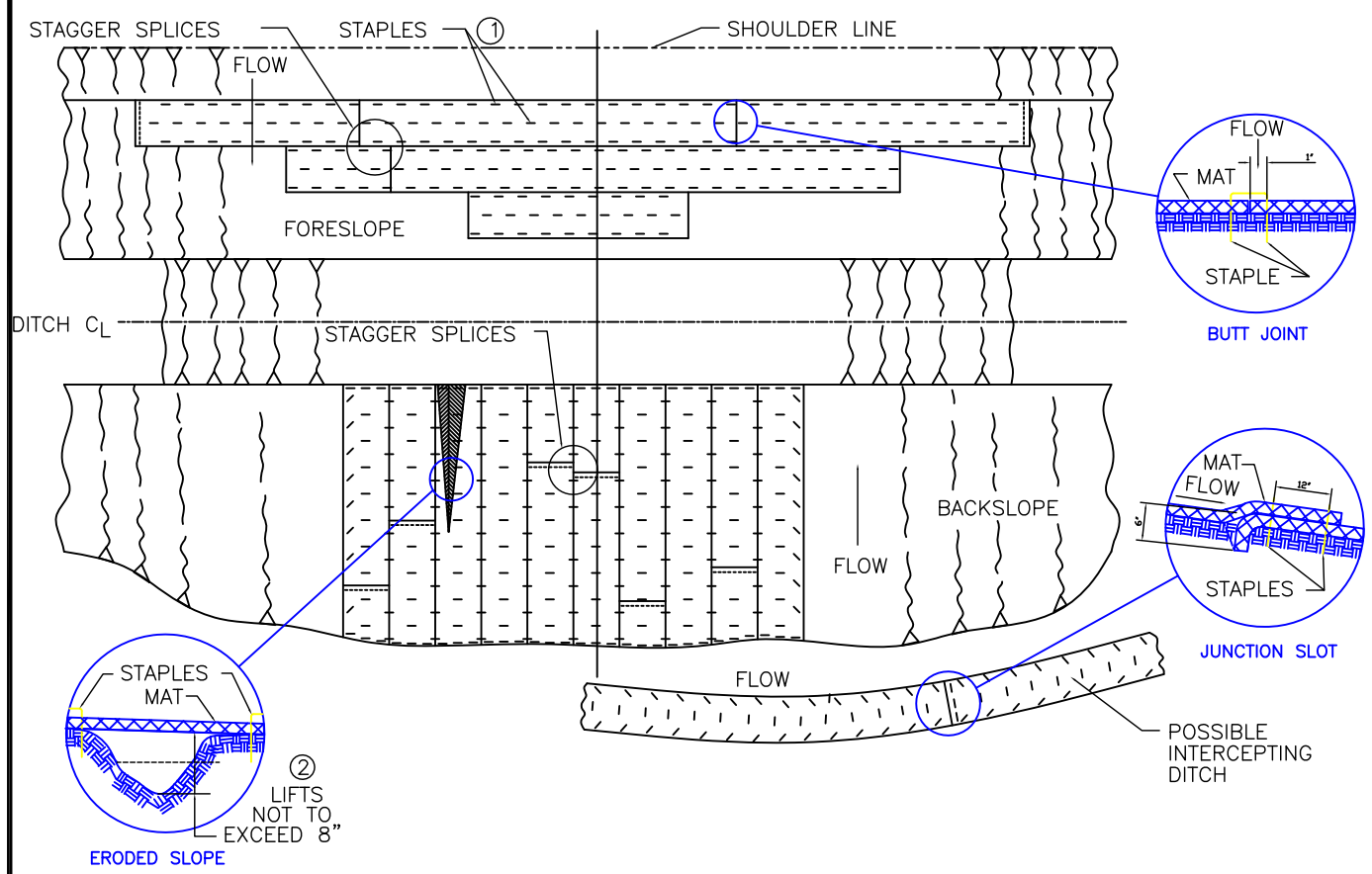

TYPICAL PLAN FOR BACKSLOPE AND FORESLOPE PROTECTION

1. SPACE TOP ROW OF STAPLES AT 18" CENTERS, BOTTOM ROW AT 36" CENTERS AND ALL OTHERS STAPLES AT 24" CENTERS.
2. WHERE EROSIVE GULLIES HAVE DEVELOPED IN BACKSLOPE THEY SHALL BE FILLED WITH SOIL AND COMPACTED PRIOR TO PLACEMENT OF MAT.
3. IF EROSIVE RILL HAS DEVELOPED ADJACENT TO SHOULDER MATERIAL IT SHALL BE FILLED WITH SUITABLE SOIL AND COMPACTED PRIOR TO PLACE OF MAT.

GENERAL NOTES:

1. EXCELSIOR MAT FOR BACKSLOPE PROTECTION IS INSTALLED WITH STRIPS PLACED APPROXIMATELY PERPENDICULAR TO ROADWAY. LOCATIONS FOR SLOPE PROTECTION SHALL BE AS SHOWN ON DRAWINGS.
2. EXCELSIOR MAT FOR FORESLOPE PROTECTION IS INSTALLED WITH STRIPS PLACED APPROXIMATELY PARALLEL TO ROADWAY. THE LOCATION, WIDTH AND NUMBER OF STRIPS SHALL BE AS SPECIFIED ON PROJECT PLANS.

FILE NO.: 1300–030	CEDAR RAPIDS METROPOLITAN AREA STANDARD DETAILS FOR PUBLIC IMPROVEMENTS
APPROVAL DATE: AUG 1999	
REVISION NO.:	SLOPE PROTECTION DETAILS (WOOD EXCELSIOR MAT) SHEET 1 OF 2
REVISION DATE:	NO. 1300–030

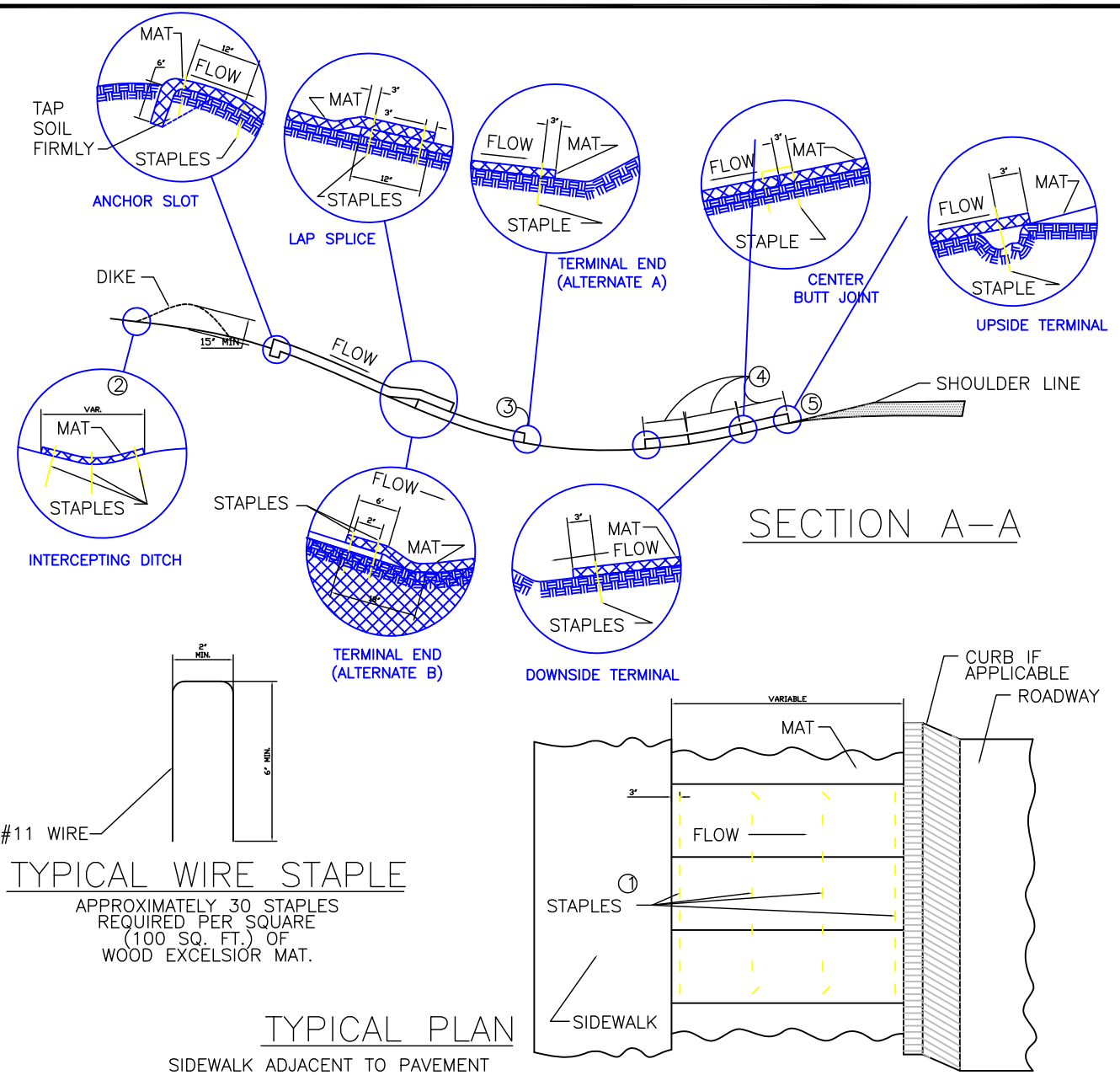

1. SPACE TOP ROW OF STAPLES AT 18" CENTERS, BOTTOM ROW AT 36" CENTERS AND ALL OTHERS STAPLES AT 24" CENTERS.
2. WHERE EROSIVE GULLIES HAVE DEVELOPED IN BACKSLOPE THEY SHALL BE FILLED WITH SOIL AND COMPACTED PRIOR TO PLACEMENT OF MAT.
3. WHERE EXCELSIOR MAT IS TO BE PLACED ALONG A DITCH BOTTOM, THE SLOPE PROTECTION SHALL BE INSTALLED TO FACILITATE PLACEMENT AS INDICATED IN ALTERNATE B. OTHERWISE INSTALL SLOPE PROTECTION AS SHOWN IN ALTERNATE A.
4. 4'–0" UNLESS SPECIFIED OTHERWISE FOR FORESLOPE PROTECTION.
5. IF EROSIVE RILL HAS DEVELOPED ADJACENT TO SHOULDER MATERIAL IT SHALL BE FILLED WITH SUITABLE SOIL AND COMPACTED PRIOR TO PLACE OF MAT.

FILE NO.: 1300–030	CEDAR RAPIDS METROPOLITAN AREA STANDARD DETAILS FOR PUBLIC IMPROVEMENTS
APPROVAL DATE: AUG 1999	
REVISION NO.:	SLOPE PROTECTION DETAILS (WOOD EXCELSIOR MAT) SHEET 2 OF 2
REVISION DATE:	NO. 1300–030

F:\ACAD\HX0789\dwg\HX0789–B2.dwg 10–25–12 10:43:39 AM Ben Antons

PROJECT NO: HX0789	DRAWN BY: BGA APPROVED BY: GMH DATE: 10/10/2012	NO. / REVISION DESCRIPTION / APPROVED / DATE	ALLTRANS, INC. 4403 1st Avenue S.E. Cedar Rapids, Iowa 52402 Phone: (319) 393-8726

City of Holy Cross Subdivision No.3
Dubuque County, Iowa

Legend, Standard Details, And Bench Mark Information

SHEET NO. B.03 OF B.17

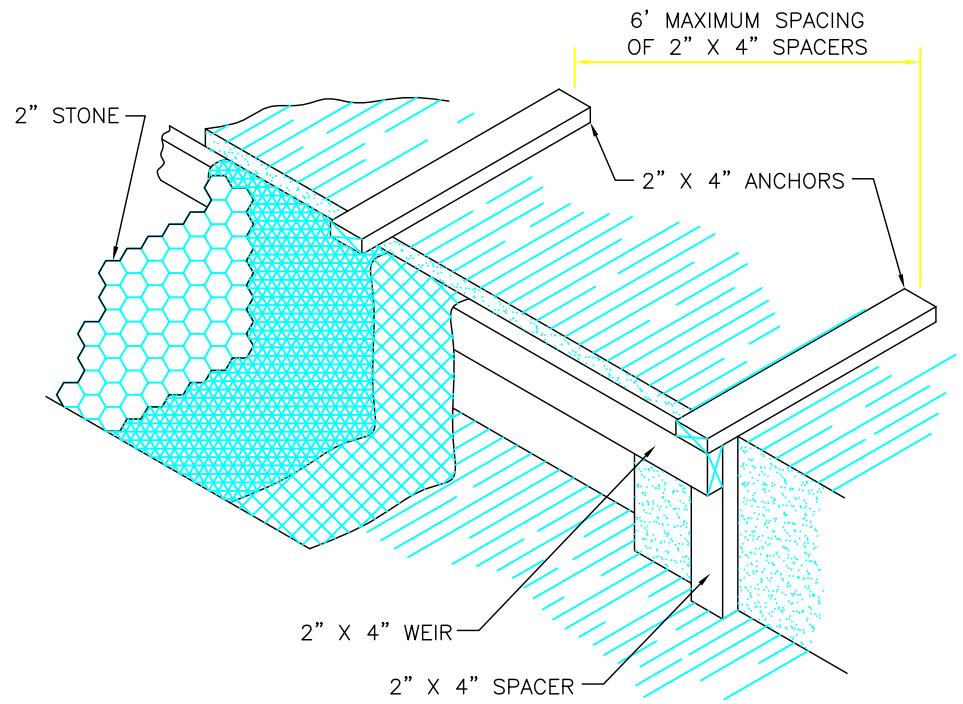

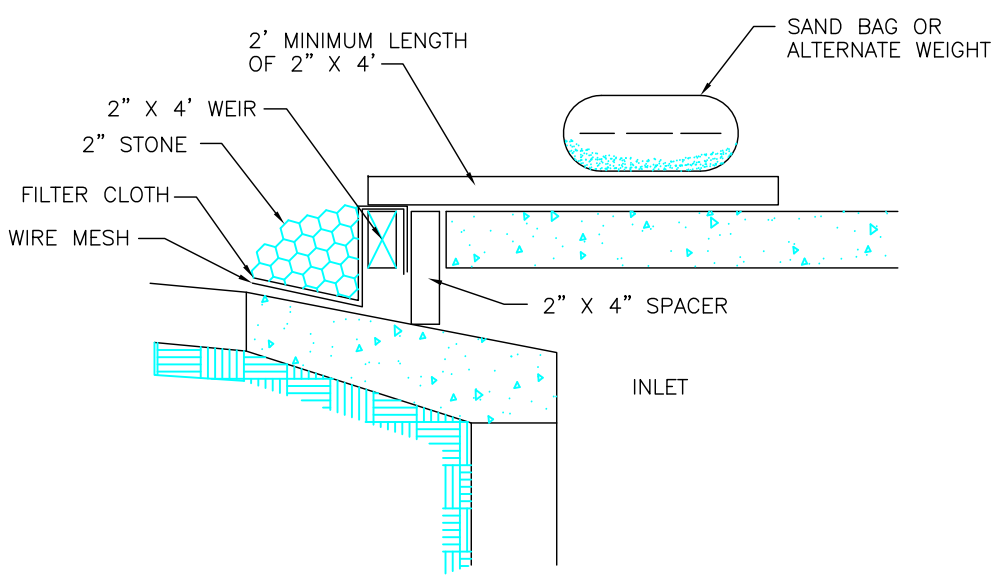

FILE NO.: 1300–025	CEDAR RAPIDS METROPOLITAN AREA STANDARD DETAILS FOR PUBLIC IMPROVEMENTS
APPROVAL DATE: JUNE 1999	
REVISION NO.:	CURB INLET PROTECTION
REVISION DATE:	NO. 1300–025

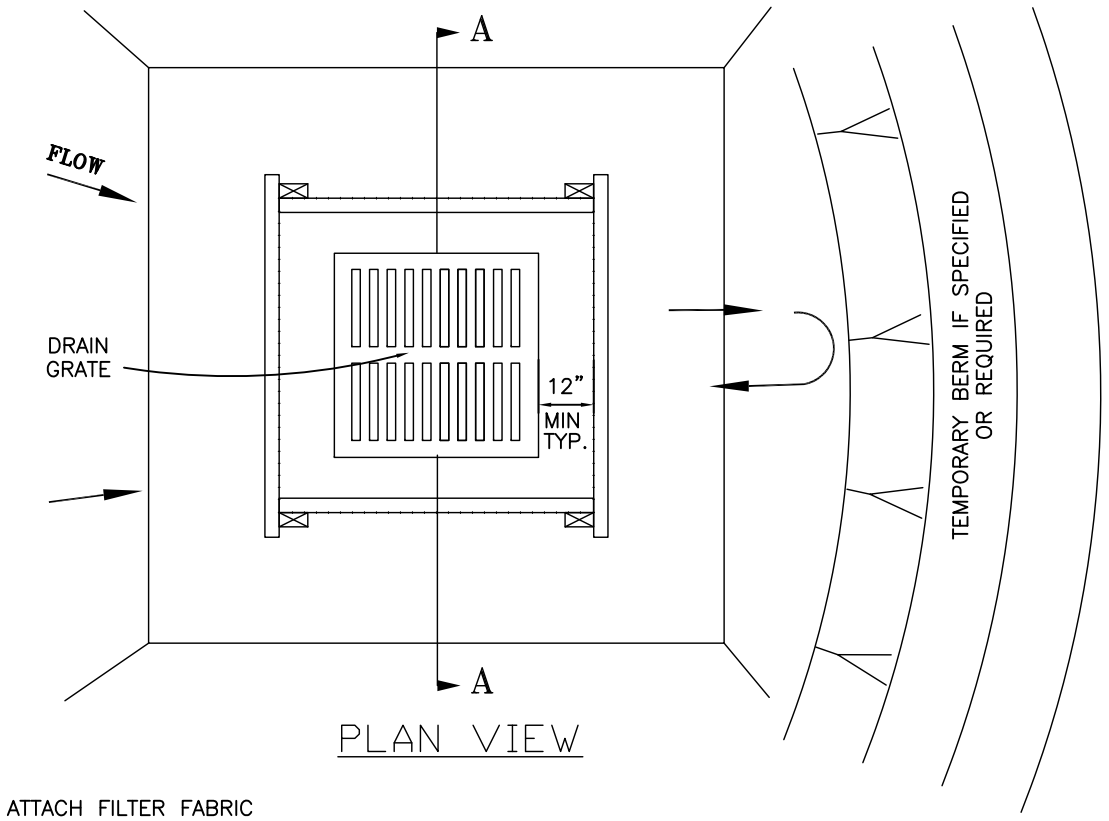

PLAN VIEW

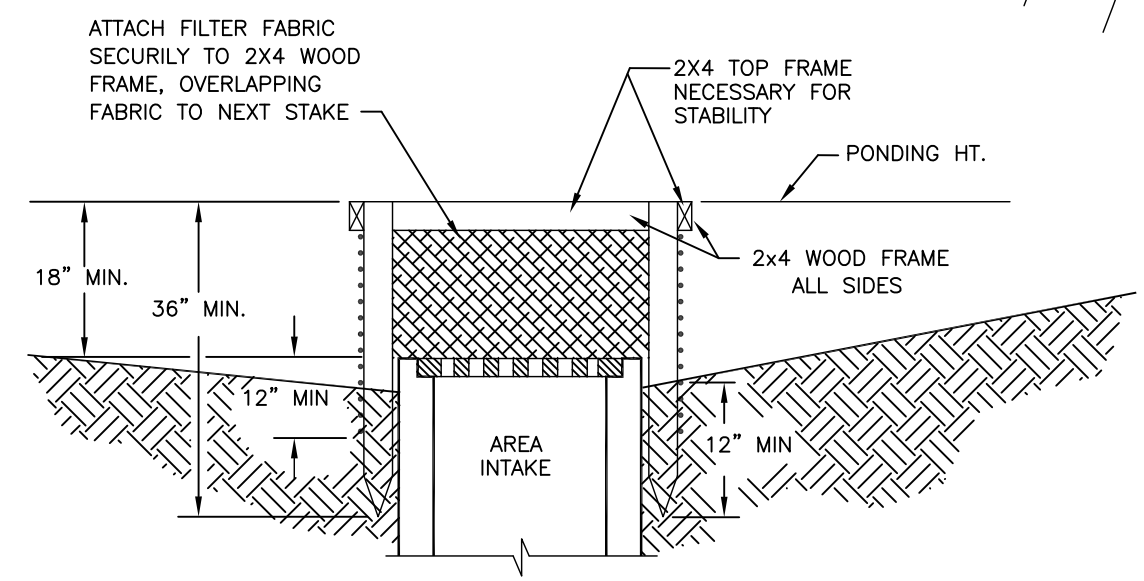

SECTION A-A

NOTES:

1. THE TOP OF THE FRAME (PONDING HEIGHT) MUST BE WELL BELOW THE GROUND ELEVATION DOWNSLOPE TO PREVENT RUNOFF FROM BYPASSING THE INLET. A TEMPORARY DIKE MAY BE NECESSARY ON THE DOWNSLOPE SIDE OF THE STRUCTURE.

FILE NO.: 1300–040	CEDAR RAPIDS METROPOLITAN AREA STANDARD DETAILS FOR PUBLIC IMPROVEMENTS
APPROVAL DATE: JUNE 1999	
REVISION NO.:	SILT FENCE SEDIMENT BARRIER AT AREA INTAKE
REVISION DATE:	NO. 1300–040

© 1994 JOHN McCULLAH

F:\ACAD\HX0789\dwg\HX0789-B2.dwg 10-25-12 10:43:59 AM Ben Antons

PROJECT NO: HX0789	DRAWN BY: BGA APPROVED BY: GMH DATE: 10/10/2012	NO. / REVISION DESCRIPTION / APPROVED / DATE	ALLTRANS, INC. 4403 1st Avenue S.E. Cedar Rapids, Iowa 52402 Phone: (319) 393-8726

City of Holy Cross Subdivision No.3
Dubuque County, Iowa

Legend, Standard Details, And Bench Mark Information

SHEET NO. B.04 OF B.17

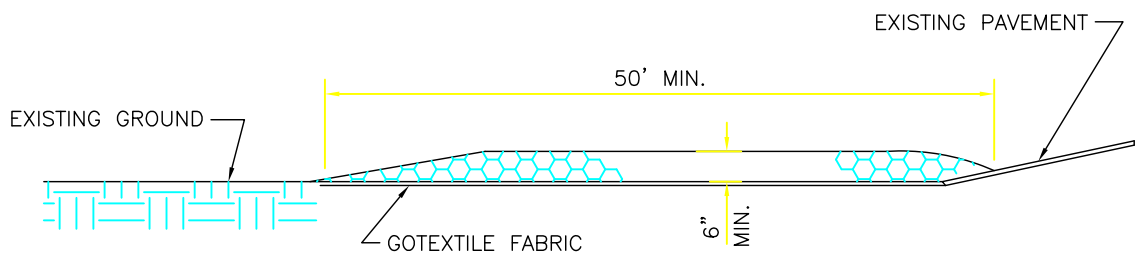

PROFILE

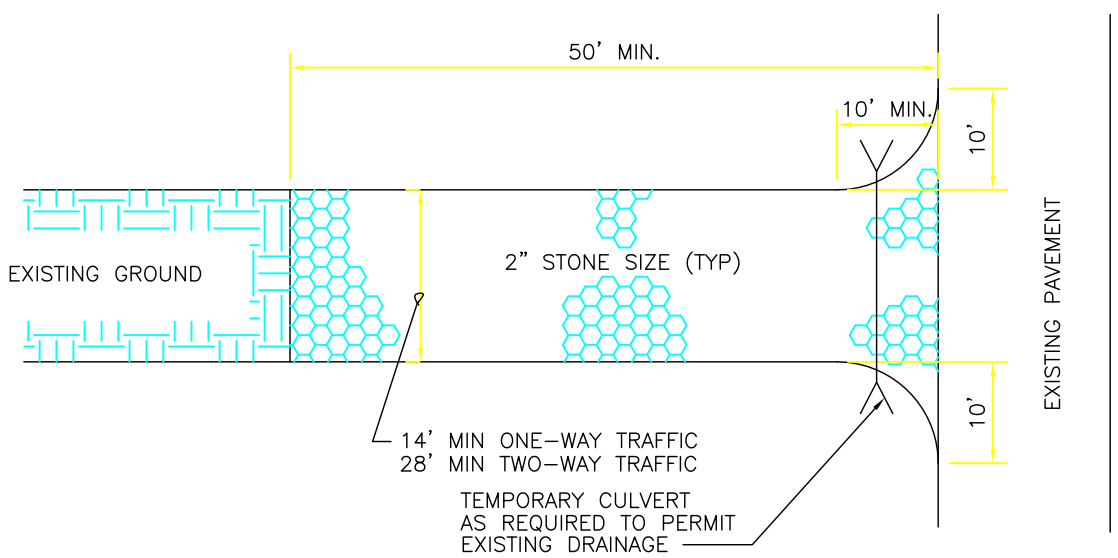

PLAN VIEW

NOTES:
1. IF APPLICABLE PLACE ASPHALTIC WEDGE IN GUTTER TO ALLOW TRAFFIC TO USE ENTRANCE WITHOUT DAMAGING CURBING.

FILE NO.: 1300-060	CEDAR RAPIDS METROPOLITAN AREA STANDARD DETAILS FOR PUBLIC IMPROVEMENTS
APPROVAL DATE: JUNE 1999	
REVISION NO.:	STABILIZED CONSTRUCTION ENTRANCE
REVISION DATE:	NO. 1300-060

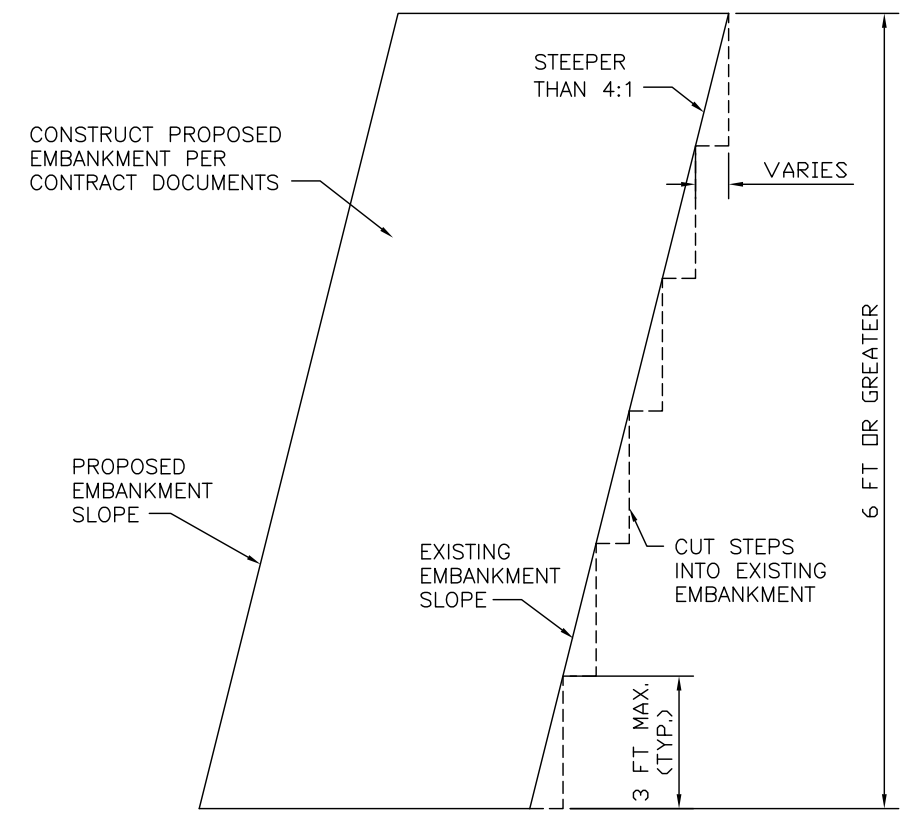

FILE NO.: 2000-020	CEDAR RAPIDS METROPOLITAN AREA STANDARD DETAILS FOR PUBLIC IMPROVEMENTS
APPROVAL DATE: NOV 1999	
REVISION NO.:	PLACEMENT OF EARTHEN FILL AGAINST AN EXISTING EMBANKMENT
REVISION DATE:	NO. 2000-020

F:\ACAD\HX0789\dwg\HX0789-B2.dwg 10-25-12 10:44:16 AM Ben Antons

PROJECT NO: HX0789	DRAWN BY: BGA APPROVED BY: GMH DATE: 10/10/2012	NO. / REVISION DESCRIPTION / APPROVED / DATE	

ALLTRANS, INC.
4403 1st Avenue S.E.
Cedar Rapids, Iowa 52402
Phone: (319) 393-8726

City of Holy Cross Subdivision No.3
Dubuque County, Iowa

Legend, Standard Details, And Bench Mark Information

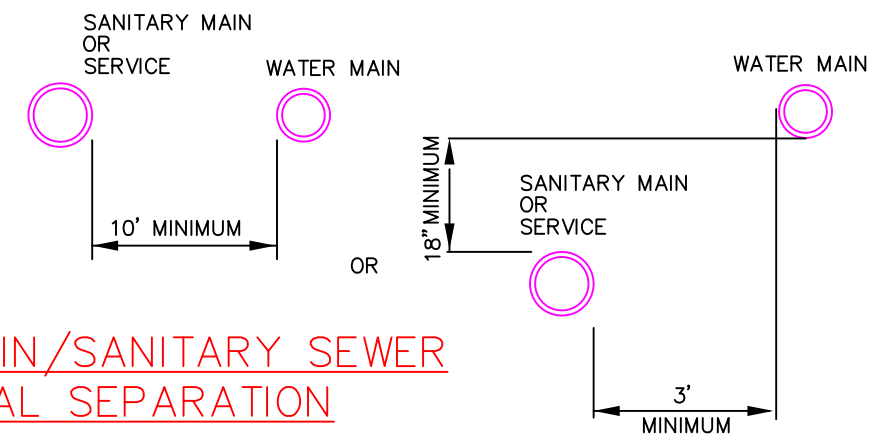

WATER MAIN/SANITARY SEWER LATERAL SEPARATION

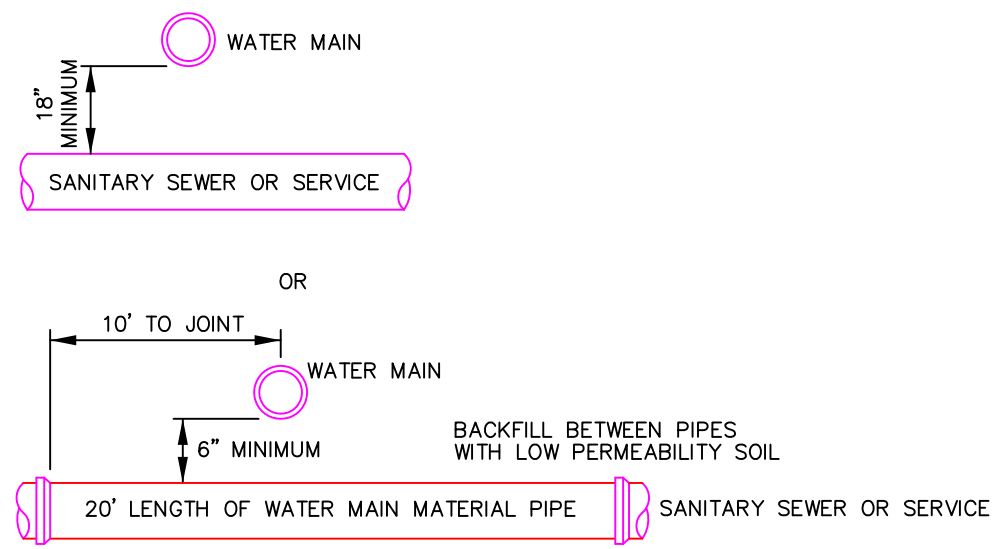

WATER MAIN/SANITARY SEWER VERTICAL SEPARATION

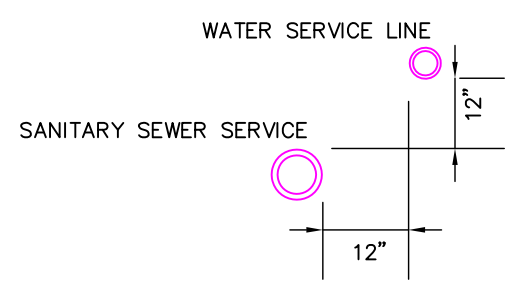

WATER SERVICE/SANITARY SERVICE SEPARATION

FILE NO.: 2300-021	CEDAR RAPIDS METROPOLITAN AREA STANDARD DETAILS FOR PUBLIC IMPROVEMENTS
APPROVAL DATE: AUG 1999	
REVISION NO.:	SANITARY SEWER/WATER MAIL PIPE SEPARATION REQUIREMENTS
REVISION DATE:	NO. 2300-021

F:\ACAD\HX0789\dwg\HX0789-B2.dwg 10-25-12 10:44:38 AM Ben Antons

PROJECT NO: HX0789	DRAWN BY: BGA APPROVED BY: GMH DATE: 10/10/2012	NO.	REVISION DESCRIPTION	APPROVED	DATE

ALLTRANS, INC.
4403 1st Avenue S.E.
Cedar Rapids, Iowa 52402
Phone: (319) 393-8726

City of Holy Cross Subdivision No.3
Dubuque County, Iowa

Legend, Standard Details, And Bench Mark Information

SHEET NO. B.06 OF B.17

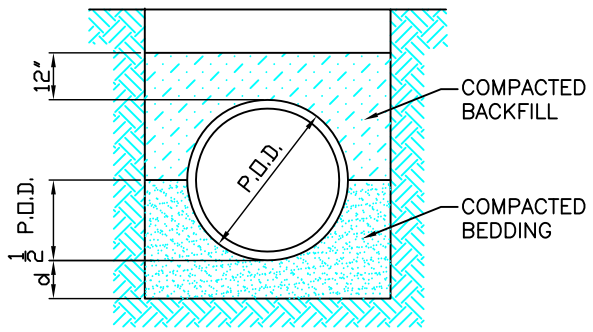

HDPE STORM SEWERS
PVC SANITARY SEWERS

CLASS A

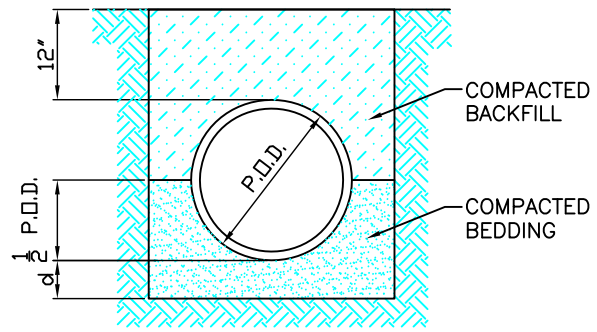

PVC TRUSS SANITARY SEWERS
PVC STORM SEWERS
RCP AND ESVCP SANITARY SEWER
WATER MAINS 20–INCH DIA. AND LARGER
PVC SANITARY SERVICE LINES

CLASS B

(COMPARES TO AWWA C150, TYPE 5 BEDDING)

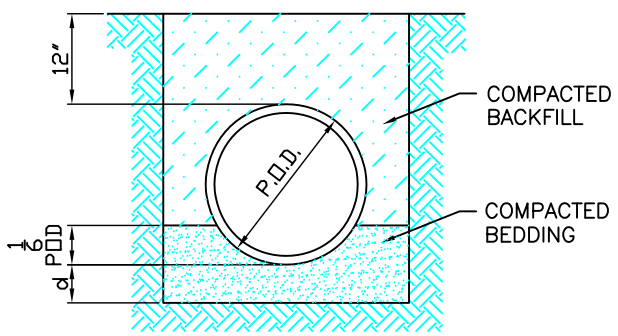

RCP STORM SEWERS
RCP AND ESVCP SANITARY SEWERS

CLASS C

(COMPARES TO AWWA C150, TYPE 4 BEDDING)

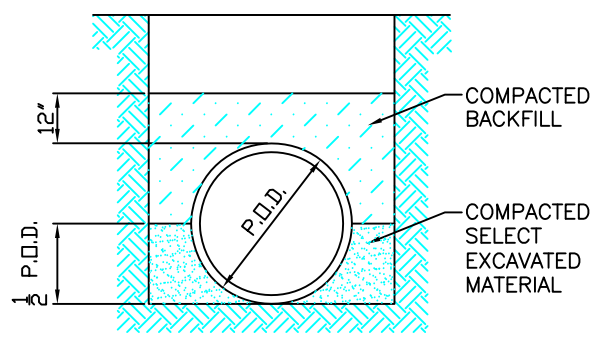

WATER MAINS UP TO AND
INCLUDING 16–INCH DIA.

CLASS D

(COMPARES TO AWWA C150, TYPE 2 BEDDING)

DEPTH OF BEDDING MATERIAL BELOW PIPE	
D	d (MIN)
27" & SMALLER	4"
30" TO 60"	6"
66" & LARGER	8"

P.O.D. = OUTSIDE DIAMETER
d = DEPTH OF BEDDING MATERIAL BELOW PIPE

NOTES:
1. FOR CLASS C AND CLASS B BEDDING, COMPACTED BACKFILL IN PIPE ENVELOPE MAY BE SUITABLE EXCAVATED MATERIAL, UNLESS GRANULAR BACKFILL OR DRAINABLE BACKFILL ARE SPECIFIED.
2. TRENCH BACKFILL ABOVE PIPE ENVELOPE SHALL BE ACCORDING TO SECTION 02200.
3. BACKFILL SHALL BE POROUS FOR STORM SEWER INSTALLATION.

FILE NO.: 2200–020	CEDAR RAPIDS METROPOLITAN AREA STANDARD DETAILS FOR PUBLIC IMPROVEMENTS	
APPROVAL DATE: AUG 1999		
REVISION NO.:	STANDARD PIPE ENVELOPES FOR CIRCULAR PIPE	NO. 2200–020
REVISION DATE:		

NOMINAL PIPE DIA. (INCHES)	6	8	10	12	15	16	18	21	24	30	36	42	48	54	60	72	84	96
WR (FEET)	4	4	4	4	4	4	4	5	5	6	6	7	7	8	8	10	11	12

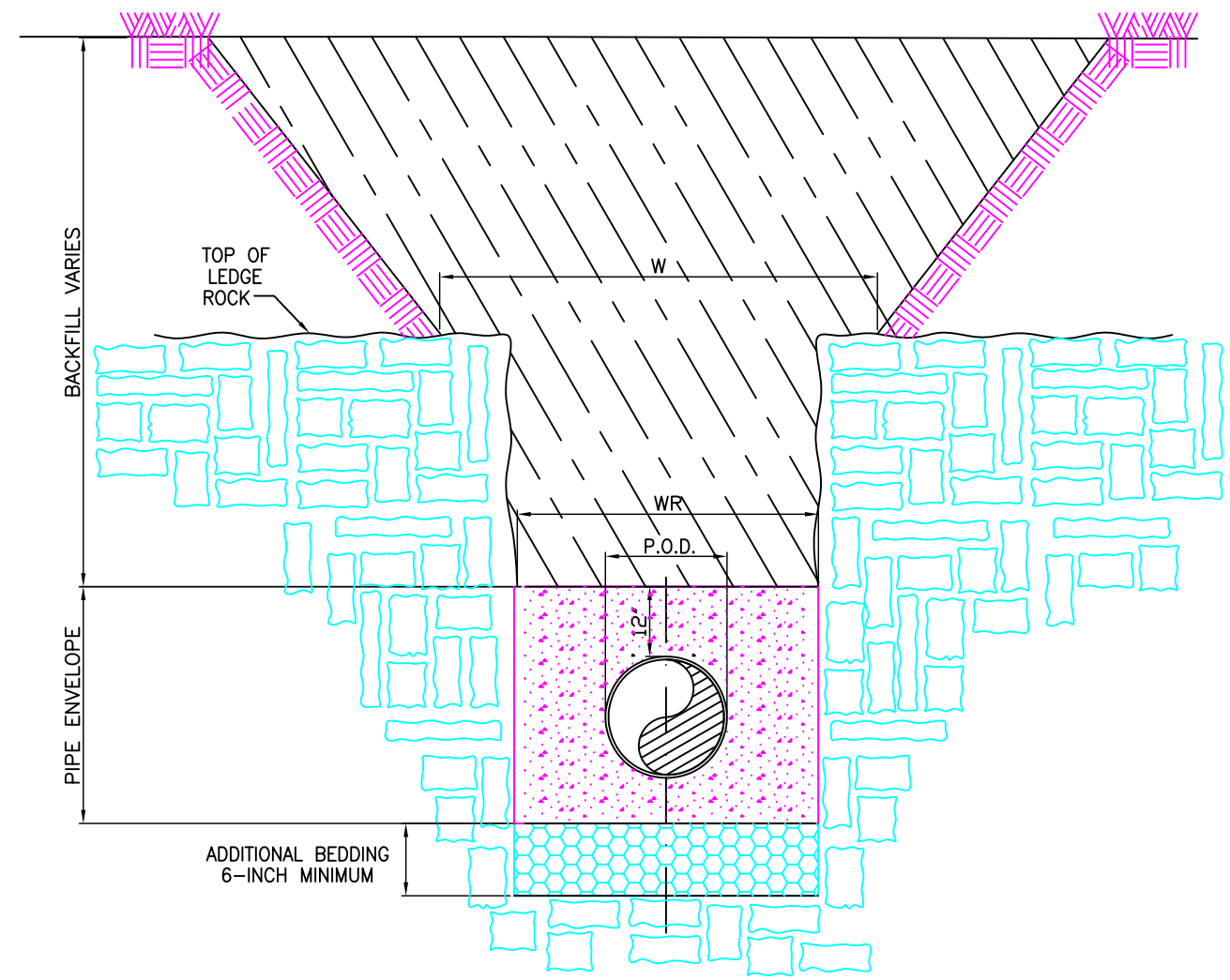

NOTES:
1. PIPE ENVELOPE WIDTH IN ROCK, WR, EQUALS PIPE O.D. (P.O.D.) PLUS 2–FOOT WITH A 4–FOOT MINIMUM.
2. PIPE ENVELOPE WIDTH IN SOIL, W, EQUALS PIPE O.D. (P.O.D.) PLUS 3–FOOT WITH A 5–FOOT MINIMUM.
3. EXCAVATED ROCK SHALL NOT BE PLACED WITHIN PIPE ENVELOPE.
4. BEDDING AND BACKFILL WITHIN PIPE ENVELOPE, AND BACKFILL ABOVE PIPE ENVELOPE SHALL BE ACCORDING TO SECTION 02200.

FILE NO.: 2200–030	CEDAR RAPIDS METROPOLITAN AREA STANDARD DETAILS FOR PUBLIC IMPROVEMENTS	
APPROVAL DATE: AUG 1999		
REVISION NO.:	STANDARD TRENCH SECTION IN ROCK	NO. 2200–030
REVISION DATE:		

PROJECT NO: HX0789

DRAWN BY: BGA
APPROVED BY: GMH
DATE: 10/10/2012

NO.	REVISION DESCRIPTION	APPROVED	DATE

ALLTRANS, INC.
4403 1st Avenue S.E.
Cedar Rapids, Iowa 52402
Phone: (319) 393-8726

City of Holy Cross Subdivision No.3
Dubuque County, Iowa

Legend, Standard Details, And Bench Mark Information

SHEET NO. B.07 OF B.17

F:\ACAD\HX0789\dwg\HX0789–B2.dwg 10–25–12 10:44:54 AM Ben Antons

NOMINAL PIPE DIA. (INCHES)	6	8	10	12	15	16	18	21	24	30	36	42	48	54	60	72	84	96
W (FEET)	5	5	5	5	5	5	5	6	6	7	7	8	8	9	9	11	12	13

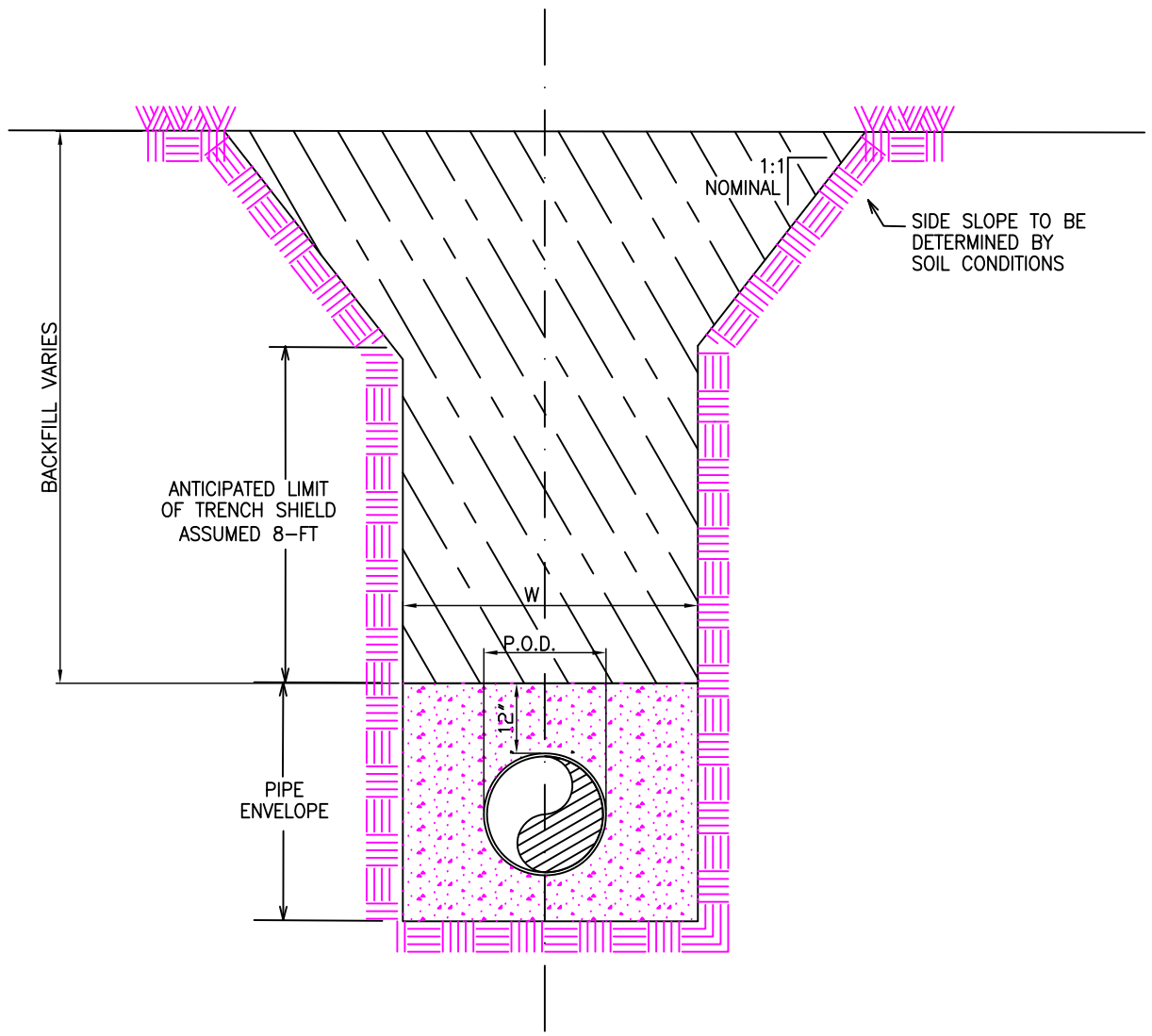

NOTES:
1. PIPE ENVELOPE WIDTH 'W' EQUALS PIPE O.D. (P.O.D.) PLUS 3-FT WITH A 5-FT MINIMUM.
2. PIPE ENVELOPE AND BACKFILL ABOVE PIPE ENVELOPE SHALL BE ACCORDING TO SECTION 02200.

FILE NO.: 2200-031	CEDAR RAPIDS METROPOLITAN AREA STANDARD DETAILS FOR PUBLIC IMPROVEMENTS
APPROVAL DATE: AUG 1999	
REVISION NO.:	STANDARD TRENCH SECTION IN SOIL — NO. 2200-031
REVISION DATE:	

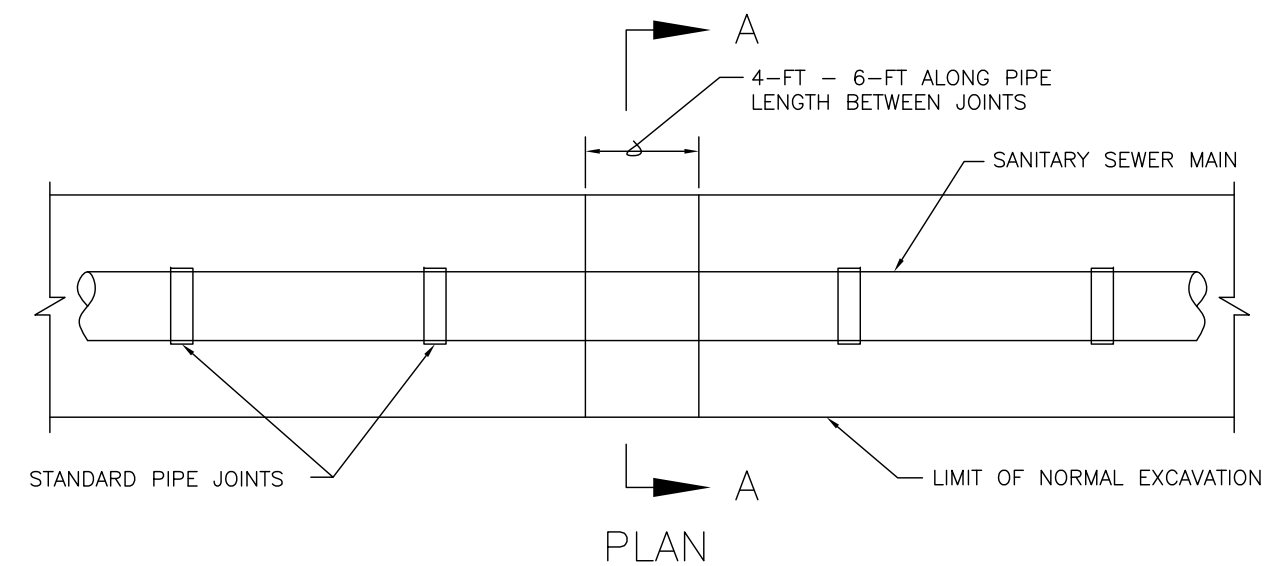

PLAN

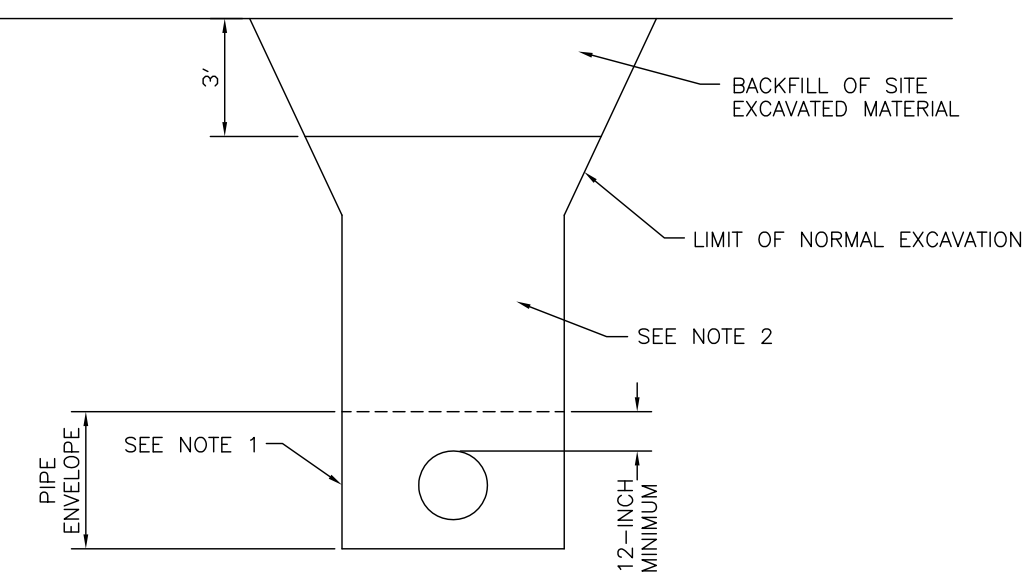

SECTION A-A

NOTES:

1. AFTER INITIAL EXCAVATION, PLACE AND COMPACT SUITABLE CLAYEY MATERIAL AS SPECIFIED. PROVIDE CRADLE FOR PIPE EQUAL TO SPECIFIED BEDDING CLASS. AFTER PIPE INSTALLATION, PLACE AND COMPACT SUITABLE CLAYEY MATERIAL WITHIN PIPE ENVELOPE TO SPECIFIED DENSITY.
2. ABOVE PIPE ENVELOPE PLACE SUITABLE EXCAVATED MATERIAL AND COMPACT TO DENSITY SPECIFIED FOR TRENCH BACKFILL.
3. CONTRACTOR MAY ELECT TO REEXCAVATE, AFTER INITIAL INSTALLATION AND BACKFILLING, TO CONSTRUCT WATERSTOP. APPROPRIATE MEASURES TO PROTECT PIPE AND TO MAINTAIN ITS SUPPORT, SHALL BE TAKEN.
4. WATERSTOPS SHALL BE SPACED AT NOMINAL 800 FOOT INTERVALS OR AS INDICATED IN THE DRAWINGS.

FILE NO.: 2200-040	CEDAR RAPIDS METROPOLITAN AREA STANDARD DETAILS FOR PUBLIC IMPROVEMENTS
APPROVAL DATE: AUG 1999	
REVISION NO.:	WATERSTOP FOR TRENCHES — NO. 2200-040
REVISION DATE:	

F:\ACAD\HX0789\dwg\HX0789-B2.dwg 10-25-12 10:45:10 AM Ben Antons

PROJECT NO: HX0789

DRAWN BY: BGA
APPROVED BY: GMH
DATE: 10/10/2012

NO.	REVISION DESCRIPTION	APPROVED	DATE

ALLTRANS, INC.
4403 1st Avenue S.E.
Cedar Rapids, Iowa 52402
Phone: (319) 393-8726

City of Holy Cross Subdivision No.3
Dubuque County, Iowa

Legend, Standard Details, And Bench Mark Information

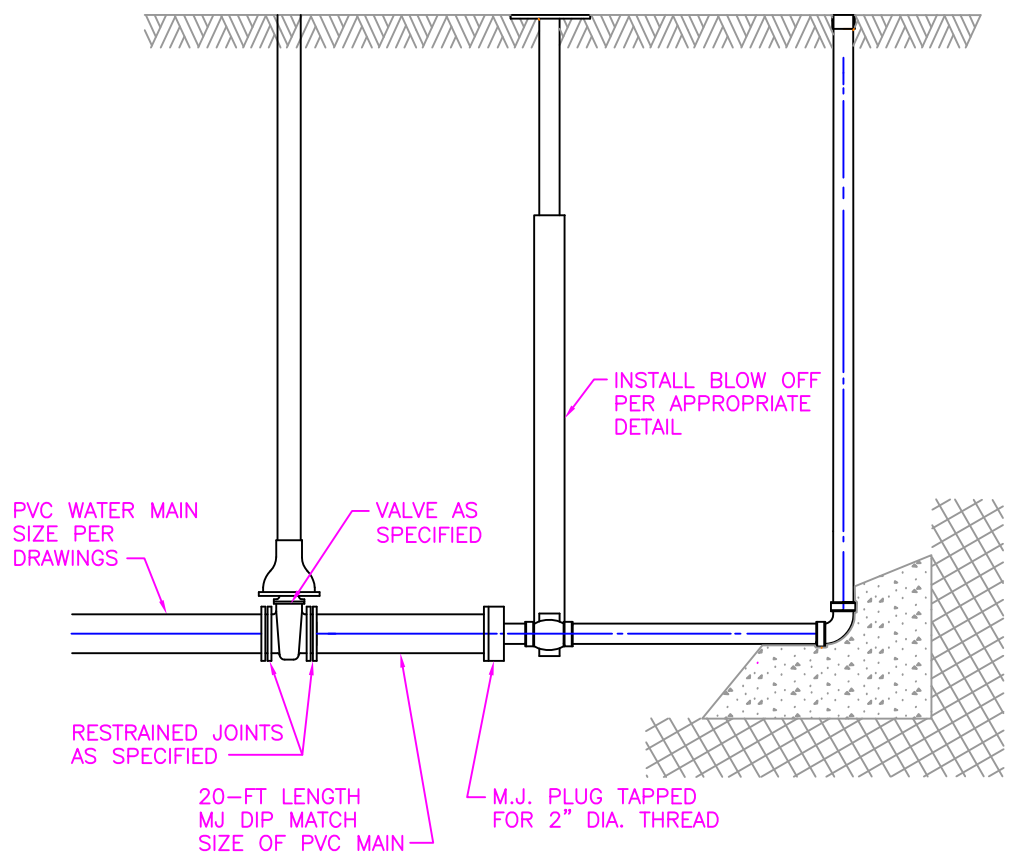

FILE NO.: 2500-020	CEDAR RAPIDS METROPOLITAN AREA STANDARD DETAILS FOR PUBLIC IMPROVEMENTS
APPROVAL DATE: AUG 1999	
REVISION NO.:	DEAD-ENDS OF PVC WATER MAINS
REVISION DATE:	NO. 2500-020

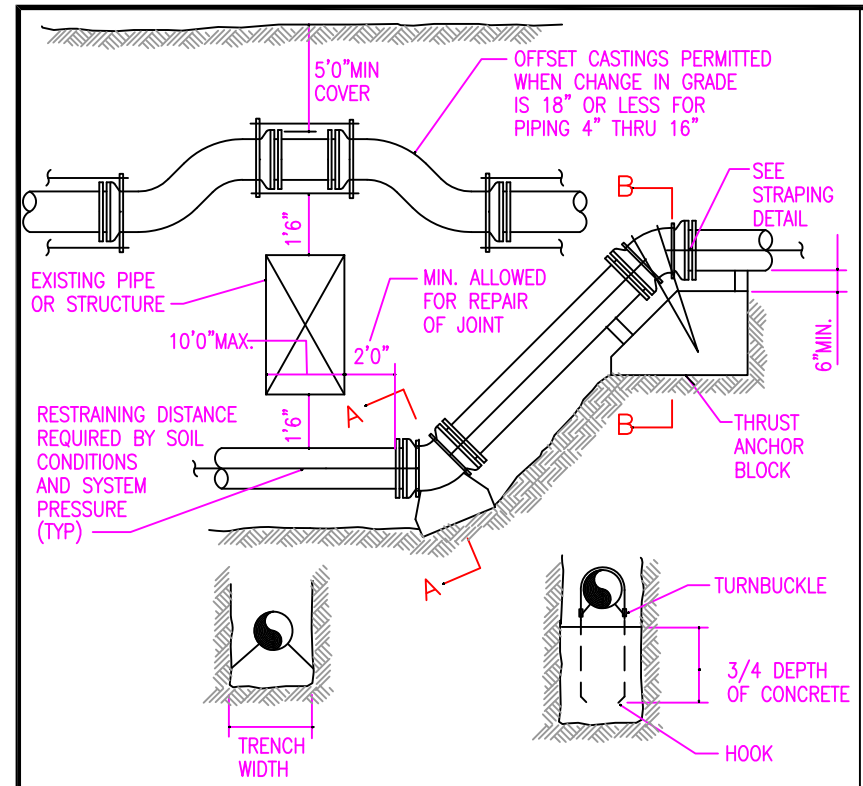

DETAIL FOR PRESSURE PIPE OFFSET

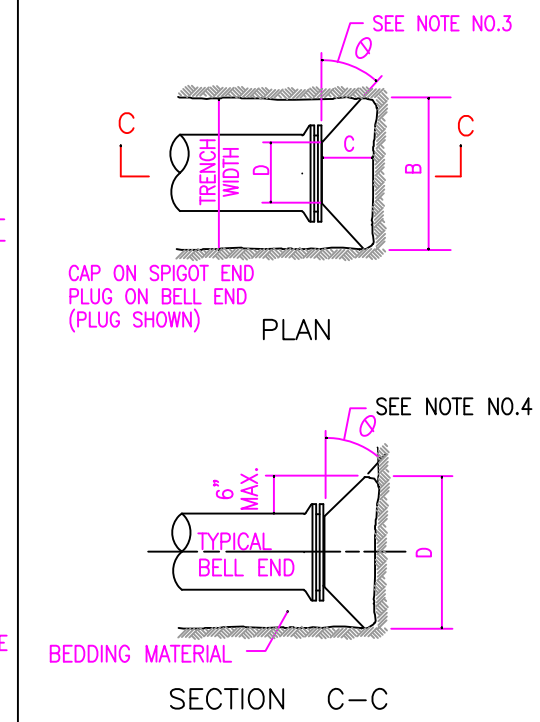

THRUST BLOCK DETAIL FOR DEAD END

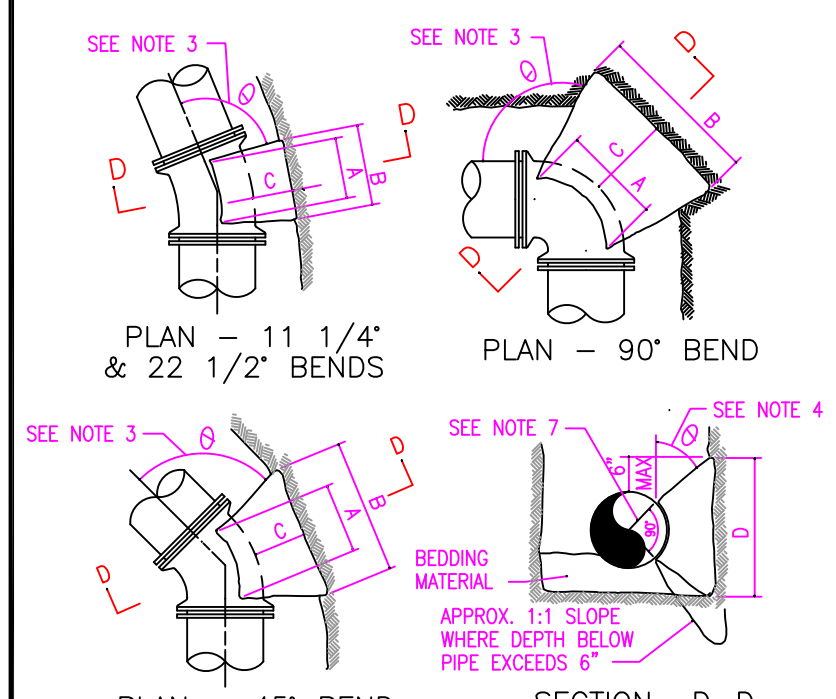

THRUST BLOCK DETAIL FOR BENDS

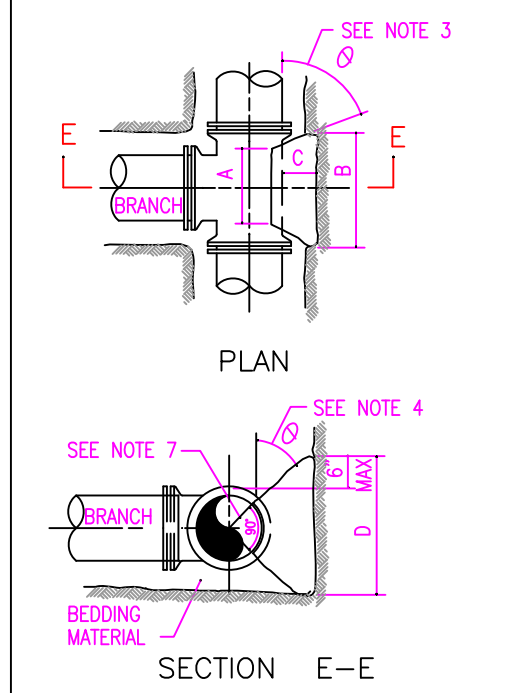

THRUST BLOCK DETAIL FOR TEES

FILE NO.: 2500-021	CEDAR RAPIDS METROPOLITAN AREA STANDARD DETAILS FOR PUBLIC IMPROVEMENTS
APPROVAL DATE: APRIL 1999	
REVISION NO.:	THRUST RESTRAINT DETAILS - SHEET 1 OF 4
REVISION DATE:	NO. 2500-021

F:\ACAD\HX0789\dwg\HX0789-B2.dwg 10-25-12 10:45:27 AM Ben Antons

PROJECT NO: HX0789	DRAWN BY: BGA APPROVED BY: GMH DATE: 10/10/2012	NO. / REVISION DESCRIPTION / APPROVED / DATE	ALLTRANS, INC. 4403 1st Avenue S.E. Cedar Rapids, Iowa 52402 Phone: (319) 393-8726

City of Holy Cross Subdivision No.3
Dubuque County, Iowa

Legend, Standard Details, And Bench Mark Information

SHEET NO. B.09 OF B.17

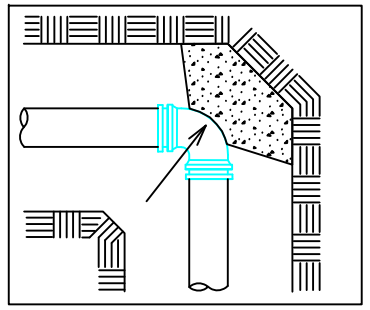

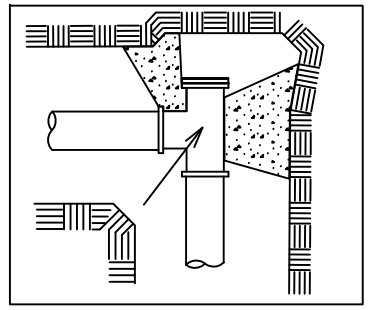

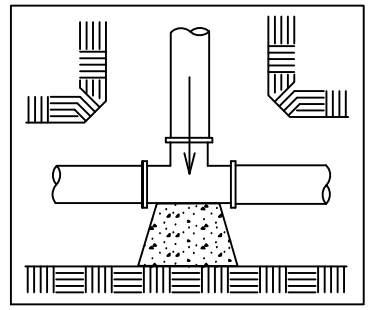

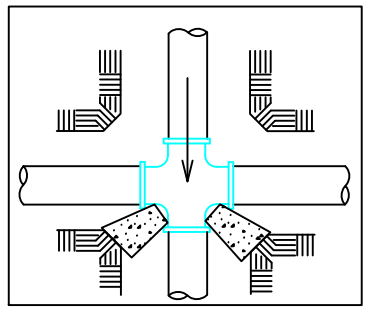

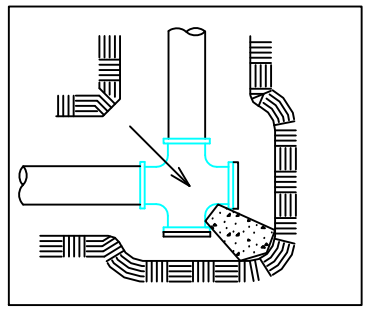

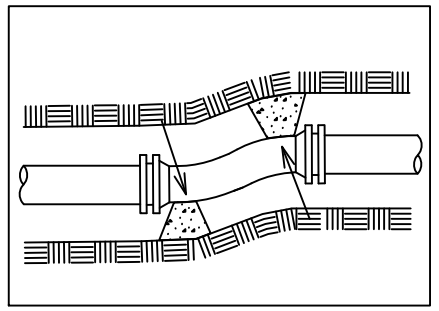

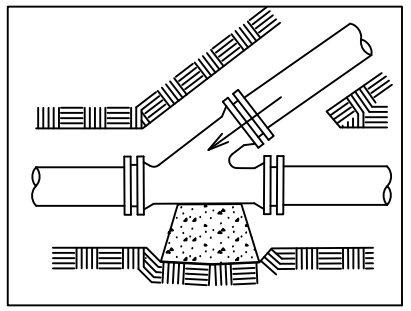

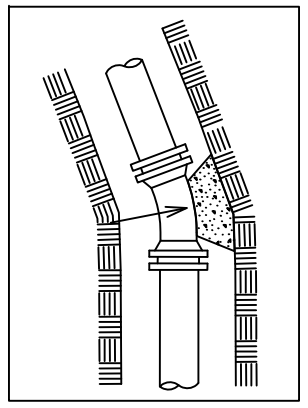

NOTES:

1. WHERE A HORIZONTAL BEND IS MADE, THE PIPING SHALL BE RESTRAINED BY MEANS OF A THRUST BLOCK AS DETAILED ON THIS SHEET. WHERE VERTICAL OFFSETS ARE MADE , THE TOP BEND SHALL BE RESTRAINED BY RESTRAINING RODS AND STRAPS, CONCRETE THRUST ANCHOR BLOCKS AND RESTRAINING RODS, OR A COMBINATION OF BOTH. THE BOTTOM BENDS SHALL BE RESTRAINED BY THRUST BLOCKS AS DETAILED.
2. "A","B" AND "D" DIMENSIONS SHALL BE AS LARGE AS POSSIBLE WITHOUT INTERFERRING WITH THE MECHANICAL JOINTS OR THE M.J. BOLTS.
3. "C" DIMENSIONS SHALL BE LARGE ENOUGH TO MAKE ANGLE θ EQUAL TO OR LARGER THAN 45°.
4. ANGLE θ SHALL BE EQUAL TO OR LARGER THAN 45°.
5. "B" AND "D" DIMENSIONS SHALL PROVIDE REQUIRED BLOCKING AREA AS LISTED IN SHEETS 3 AND 4 OF THIS DETAIL. REFER TO THE SPECIFICATIONS FOR THE PRESSURE RATING OF THE PIPING SYSTEMS.
6. CONCRETE SHALL BEAR ON THE CONCRETE QUADRANT OF PIPE AS A MINIMUM, SEE DETAIL ABOVE.
7. THE THRUST BLOCK AREAS SHOWN ON SHEETS 3 AND 4 OF THIS DETAIL ARE CALCULATED USING A SOIL BEARING CAPACITY OF 2000 PSF. IF GREATER SOIL BEARING CAPACITY IS AVAILABLE, THE CONTRACTOR MAY, AFTER REVIEW BY THE ENGINEER, REDUCE THE THRUST BLOCK AREAS SHOWN. THE THRUST BLOCK AREA SHALL BE INCREASED IF THE SOIL IS NOT CAPABLE OF PROVIDING 2000 PSF SOIL BEARING CAPACITY.

FILE NO.: 2500-021	CEDAR RAPIDS METROPOLITAN AREA STANDARD DETAILS FOR PUBLIC IMPROVEMENTS
APPROVAL DATE: JULY 1999	
REVISION NO.:	THRUST RESTRAINT DETAILS – SHEET 2 OF 4
REVISION DATE:	NO. 2500-021

THRUST RESTRAINT DETAILS

RESULTANT THRUST AT FITTINGS, POUNDS
FOR TEST WATER PRESSURE OF 100 PSI

SIZE IN.	TEE OR DEAD END	90-DEG BEND	45-DEG BEND	22.5-DEG BEND	11.25-DEG BEND
4	1,810	2,559	1,385	706	355
6	3,739	5,288	2,862	1,459	733
8	6,433	9,097	4,923	2,510	1,261
10	9,677	13,685	7,406	3,776	1,897
12	13,685	19,353	10,474	5,340	2,683
16	23,779	33,628	18,199	9,278	4,661
20	36,644	51,822	28,046	14,298	7,183
24	52,279	73,934	40,013	20,398	10,249
30	80,425	113,738	61,554	31,380	15,766
36	115,209	162,931	88,177	44,952	22,585
42	155,528	219,950	119,036	60,684	30,489
48	202,683	286,637	155,127	79,083	39,733
54	256,072	362,140	195,989	99,914	50,199

MINIMUM AREA FOR THRUST BEARING, SQ. FT.
FOR TEST WATER PRESSURE OF 100 PSI

SIZE IN	TEE OR DEAD END	90-DEG BEND	45-DEG BEND	22.5-DEG BEND	11.25-DEG BEND
4	1.0	1.3	1.0	1.0	1.0
6	1.9	2.6	1.4	1.0	1.0
8	3.2	4.5	2.5	1.3	1.0
10	4.8	6.8	3.7	1.9	1.0
12	6.8	9.7	5.2	2.7	1.3
16	11.9	16.8	9.1	4.6	2.3
20	18.3	25.9	14.0	7.1	3.6
24	26.1	37.0	20.0	10.2	5.1
30	40.2	56.9	30.8	15.7	7.9
36	57.6	81.5	44.1	22.5	11.3
42	77.8	110.0	59.5	30.3	15.2
48	101.3	143.3	77.6	39.5	19.9
54	128.0	181.1	98.0	50.0	25.1

THE ABOVE AREAS ARE BASED UPON A SOIL BEARING CAPA-CITY OF 2000 PSF. IF ACTUAL SOIL BEARING STRENGTH IS LESS THAN 2000 PSF, THE THRUST BEARING AREA SHALL BE INCREASED BASED ON THE ACTUAL SOIL BEARING STRENGTH.

FILE NO.: 2500-021	CEDAR RAPIDS METROPOLITAN AREA STANDARD DETAILS FOR PUBLIC IMPROVEMENTS
APPROVAL DATE: APRIL 1999	
REVISION NO.:	THRUST RESTRAINT DETAILS – SHEET 3 OF 4
REVISION DATE:	NO. 2500-021

F:\ACAD\HX0789\dwg\HX0789-B2.dwg 10-25-12 10:45:43 AM Ben Antons

PROJECT NO: HX0789

DRAWN BY: BGA
APPROVED BY: GMH
DATE: 10/10/2012

NO.	REVISION DESCRIPTION	APPROVED	DATE

ALLTRANS, INC.
4403 1st Avenue S.E.
Cedar Rapids, Iowa 52402
Phone: (319) 393-8726

City of Holy Cross Subdivision No.3
Dubuque County, Iowa

Legend, Standard Details, And Bench Mark Information

THRUST RESTRAINT DETAILS

RESULTANT THRUST AT FITTINGS, POUNDS
FOR TEST WATER PRESSURE OF 150 PSI

SIZE IN.	TEE OR DEAD END	90–DEG BEND	45–DEG BEND	22.5–DEG BEND	11.25–DEG BEND
4	2,715	3,839	2,078	1,059	533
6	5,609	7,932	4,293	2,189	1,100
8	9,650	13,646	7,385	3,765	1,892
10	14,516	20,528	11,109	5,664	2,846
12	20,528	29,030	15,711	8,010	4,025
16	35,669	50,442	27,299	13,917	6,992
20	54,966	77,733	42,069	21,447	10,775
24	78,419	110,901	60,020	30,597	15,374
30	120,638	170,607	92,331	47,070	23,649
36	172,814	244,397	132,266	67,428	33,878
42	233,292	329,925	178,554	91,026	45,734
48	304,025	429,956	232,691	118,625	59,600
54	384,108	543,210	293,984	149,871	75,299

MINIMUM AREA FOR THRUST BEARING, SQ. FT.
FOR TEST WATER PRESSURE OF 150 PSI

SIZE IN.	TEE OR DEAD END	90–DEG BEND	45–DEG BEND	22.5–DEG BEND	11.25–DEG BEND
4	1.4	1.9	1.0	1.0	1.0
6	2.8	4.0	2.1	1.1	1.0
8	4.8	6.8	3.7	1.9	1.0
10	7.3	10.3	5.6	2.8	1.4
12	1.03	14.5	7.9	4.0	2.0
16	17.8	25.2	13.6	7.0	3.5
20	27.5	38.9	21.0	10.7	5.4
24	39.2	55.5	30.0	15.3	7.7
30	60.3	85.3	46.2	23.5	11.8
36	86.4	122.2	66.1	33.7	16.9
42	116.6	165.0	89.3	45.5	22.9
48	152.0	215.0	116.3	59.3	29.8
54	192.1	271.6	147.0	74.9	37.6

THE ABOVE AREAS ARE BASED UPON A SOIL BEARING CAPACITY OF 2000 PSF. IF ACTUAL SOIL BEARING STRENGTH IS LESS THAN 2000 PSF, THE THRUST BEARING AREA SHALL BE INCREASED BASED ON THE ACTUAL SOIL BEARING STRENGTH.

FILE NO.: 2500–021	CEDAR RAPIDS METROPOLITAN AREA STANDARD DETAILS FOR PUBLIC IMPROVEMENTS
APPROVAL DATE: APRIL 1999	
REVISION NO.:	THRUST RESTRAINT DETAILS – SHEET 4 OF 4
REVISION DATE:	NO. 2500–021

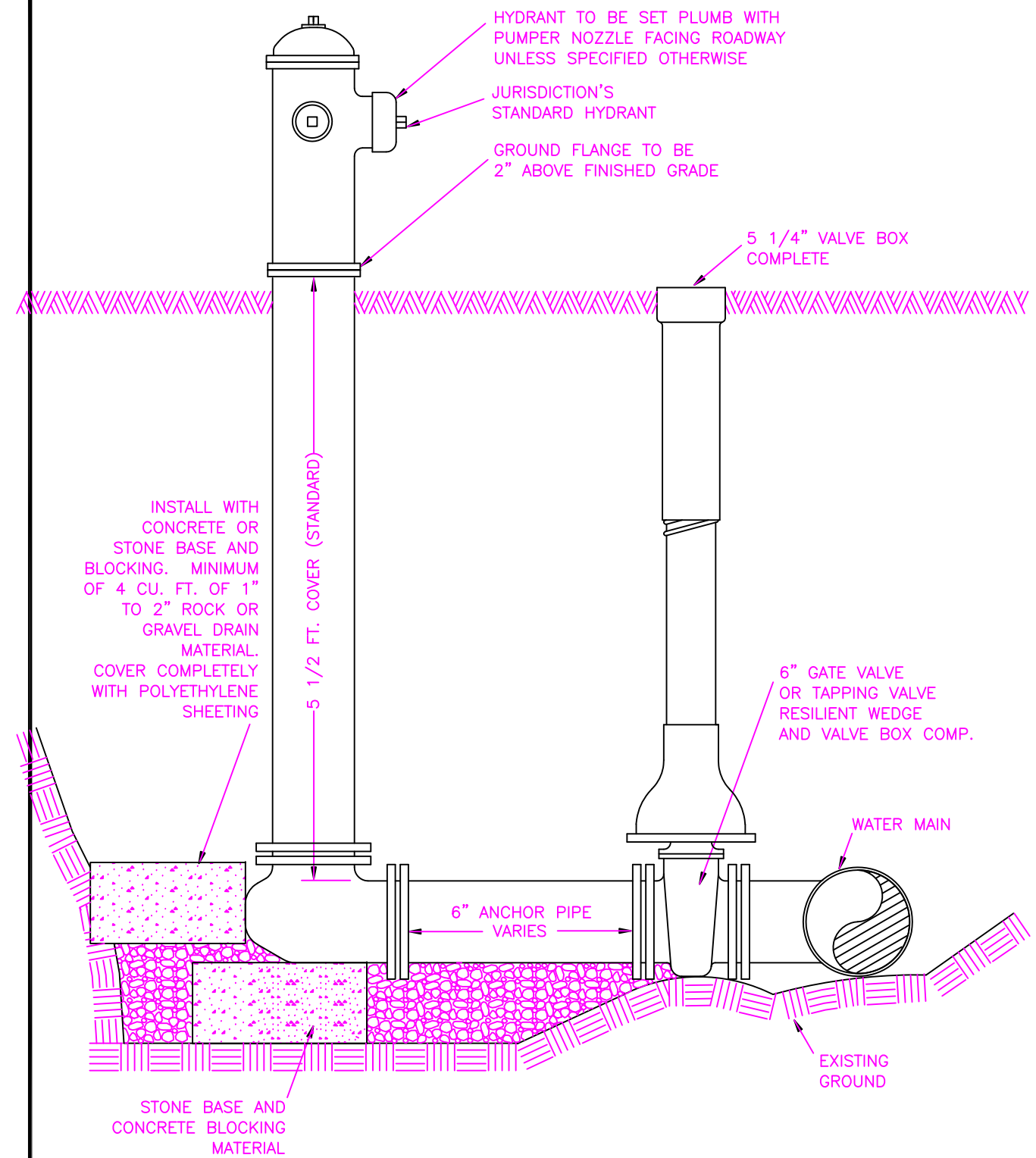

NOTE: SEE SPECIAL PROVISION SECTION 02500 – STANDARD SPECIFICATIONS

FILE NO.: 2500–042	CEDAR RAPIDS METROPOLITAN AREA STANDARD DETAILS FOR PUBLIC IMPROVEMENTS
APPROVAL DATE: JULY 1999	
REVISION NO.:	HYDRANT SET DETAIL PERPENDICULAR TO WATER MAIN – SHEET 1 OF 2
REVISION DATE:	NO. 2500–042

F:\ACAD\HX0789\dwg\HX0789–B2.dwg 10–25–12 10:46:03 AM Ben Antons

PROJECT NO: HX0789

DRAWN BY: BGA
APPROVED BY: GMH
DATE: 10/10/2012

NO.	REVISION DESCRIPTION	APPROVED	DATE

ALLTRANS, INC.
4403 1st Avenue S.E.
Cedar Rapids, Iowa 52402
Phone: (319) 393-8726

City of Holy Cross Subdivision No.3
Dubuque County, Iowa

SHEET NO. B.11 OF B.17

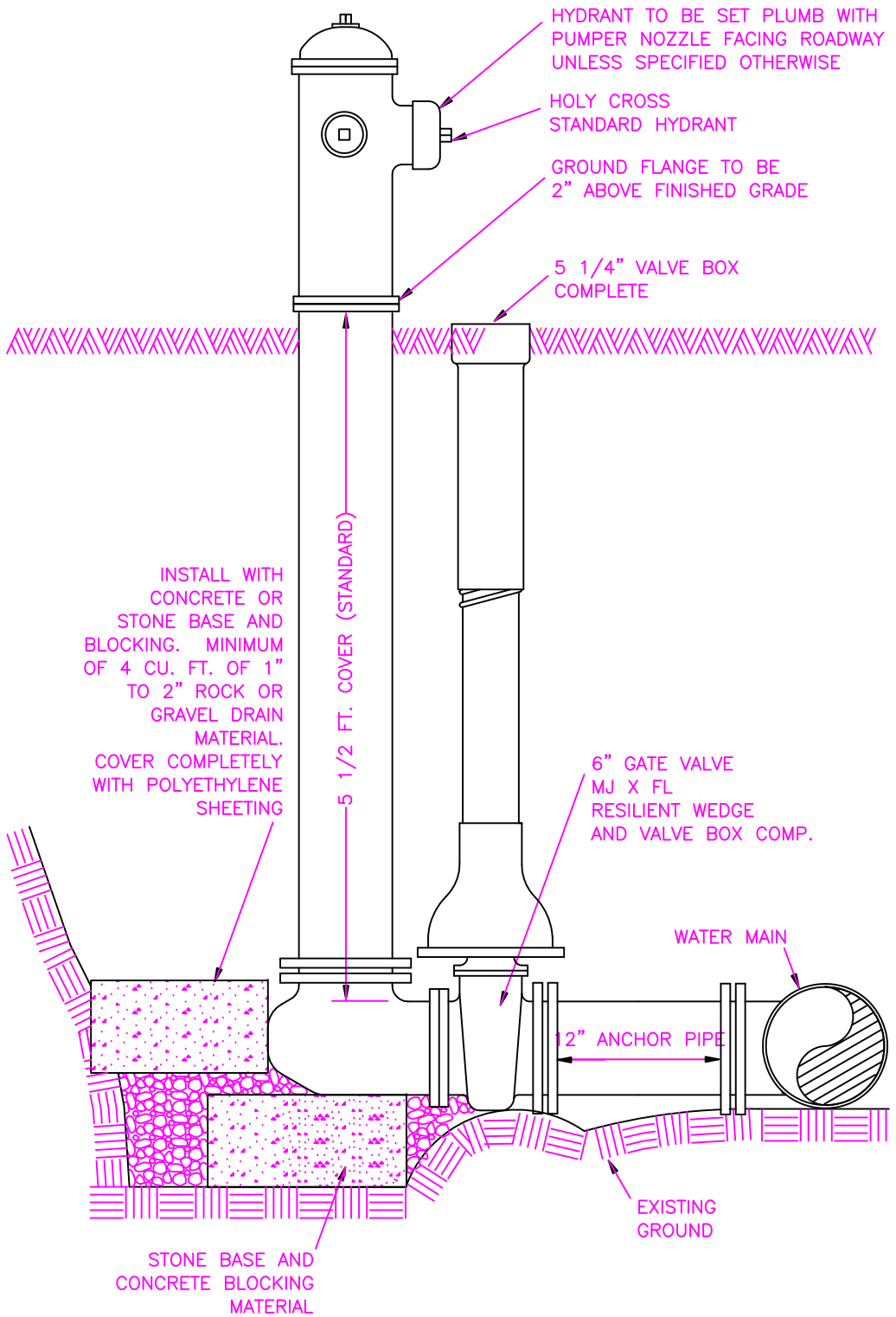

NOTE: SEE SPECIAL PROVISION SECTION 02500 – STANDARD SPECIFICATIONS

FILE NO.: 2500–042	CEDAR RAPIDS METROPOLITAN AREA STANDARD DETAILS FOR PUBLIC IMPROVEMENTS
APPROVAL DATE: JULY 1999	
REVISION NO.:	HYDRANT SET DETAIL PERPENDICULAR TO WATER MAIN – SHEET 2 OF 2
REVISION DATE:	NO. 2500–042

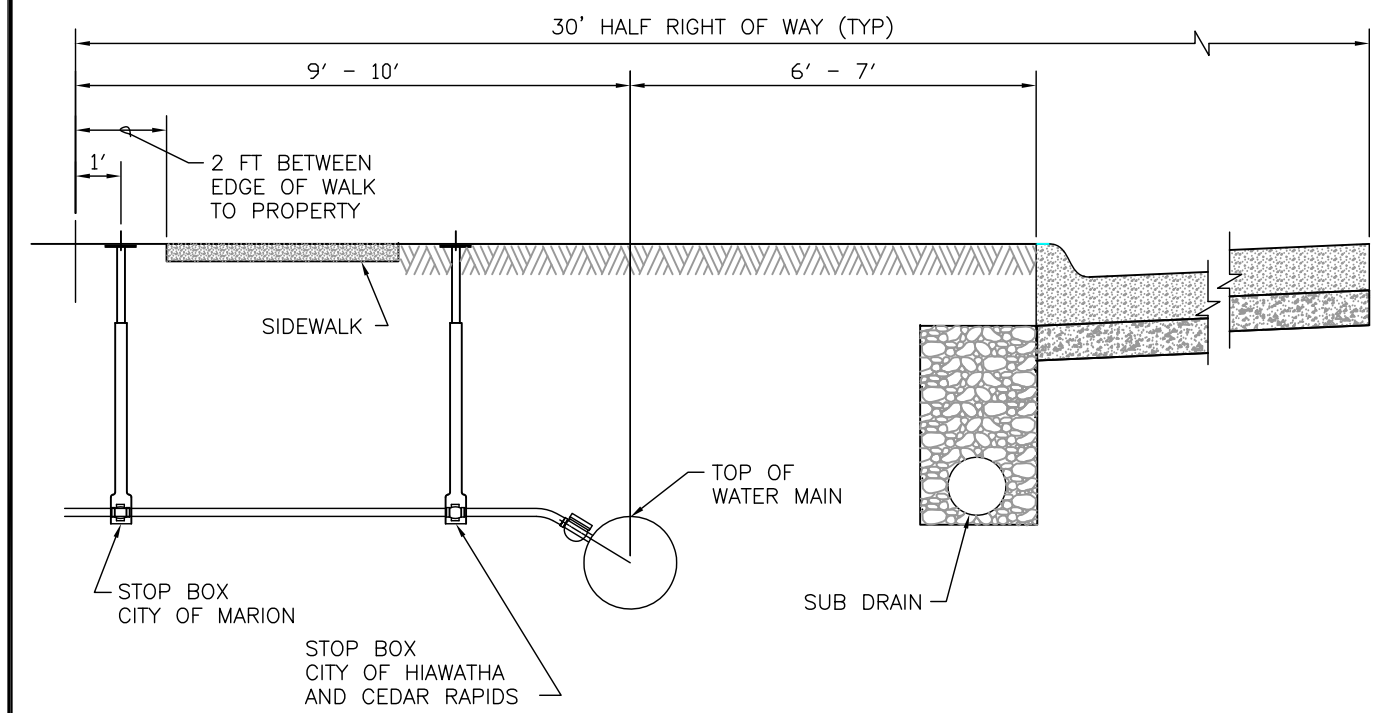

NOTES:

1. REFER TO TECHNICAL SPECIFICATIONS FOR ACCEPTABLE SERVICE LINE MATERIALS AND PROCEDURES.

FILE NO.: 2500–080	CEDAR RAPIDS METROPOLITAN AREA STANDARD DETAILS FOR PUBLIC IMPROVEMENTS
APPROVAL DATE: APRIL 1999	
REVISION NO.:	TYPICAL WATER SERVICE LINE INSTALLATION – RESIDENTIAL AREA
REVISION DATE:	NO. 2500–080

F:\ACAD\HX0789\dwg\HX0789–B2.dwg 10–25–12 10:46:22 AM Ben Antons

PROJECT NO: HX0789

DRAWN BY: BGA
APPROVED BY: GMH
DATE: 10/10/2012

NO.	REVISION DESCRIPTION	APPROVED	DATE

ALLTRANS, INC.
4403 1st Avenue S.E.
Cedar Rapids, Iowa 52402
Phone: (319) 393-8726

City of Holy Cross Subdivision No.3
Dubuque County, Iowa

Legend, Standard Details, And Bench Mark Information

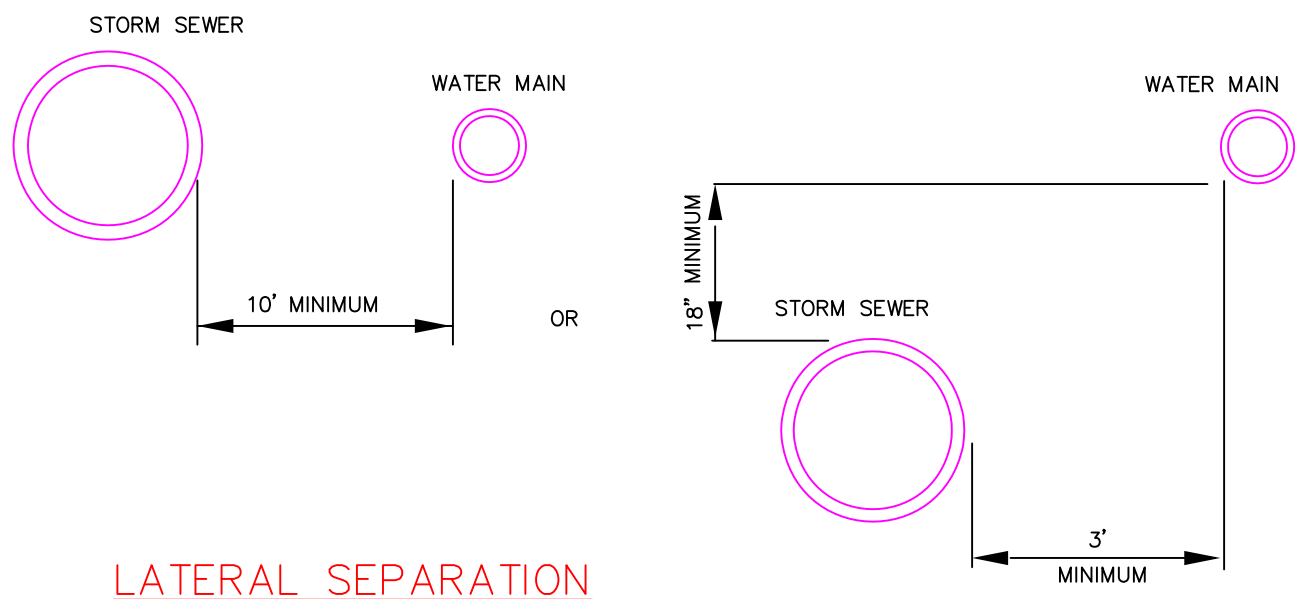

LATERAL SEPARATION

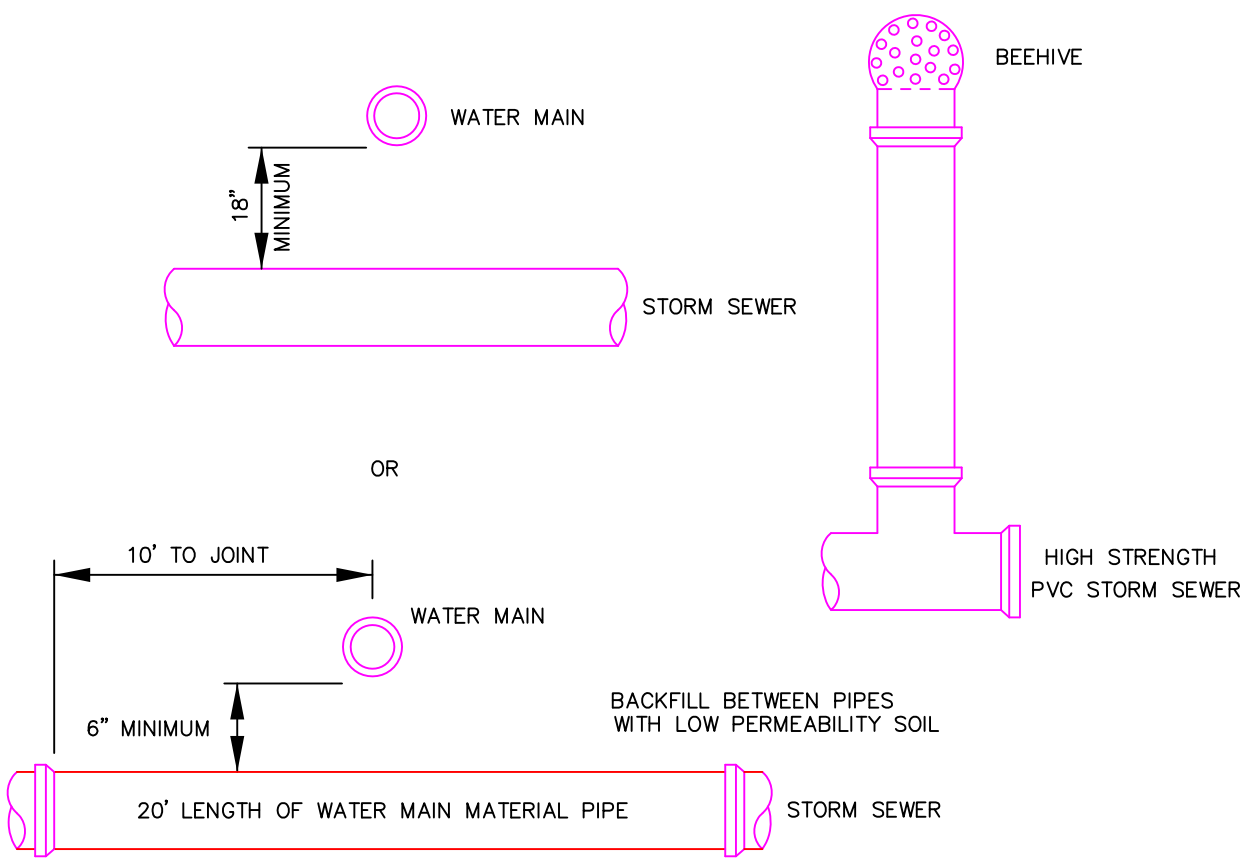

FILE NO.: 2400-021	CEDAR RAPIDS METROPOLITAN AREA STANDARD DETAILS FOR PUBLIC IMPROVEMENTS
APPROVAL DATE: AUG 1999	
REVISION NO.:	STORM SEWER/WATER MAIN PIPE SEPARATION REQUIREMENTS
REVISION DATE:	NO. 2400-021

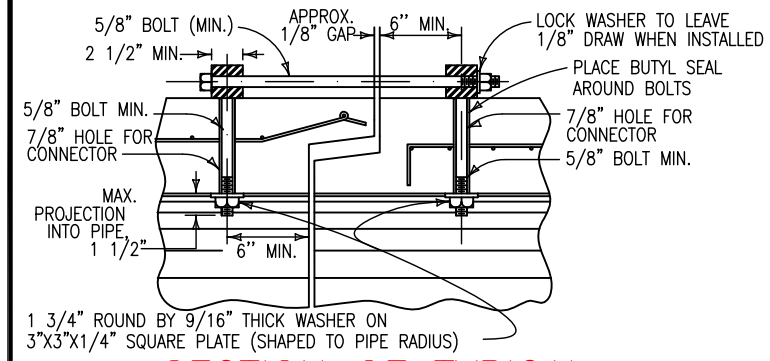

SECTION OF TYPICAL PIPE CONNECTOR

(CONCRETE PIPE TO CONCRETE PIPE)

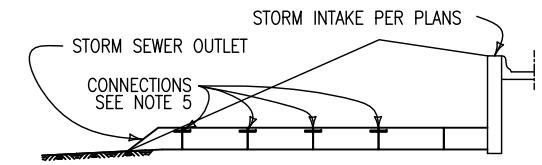

TYPICAL INSTALLATION

NEW CONSTRUCTION
TYPE 1 AND TYPE 2 CONNECTIONS

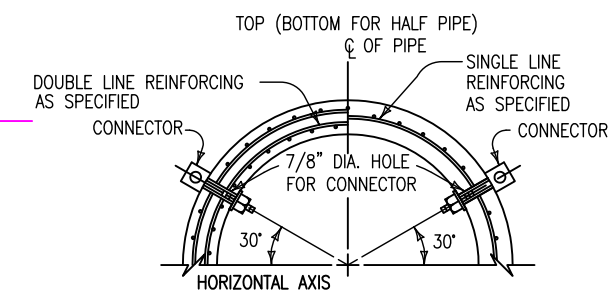

TYPICAL SECTION

TYPE 1 CONNECTION (SEALED JOINT)
TYPE 2 CONNECTION (NON-SEALED JOINT)

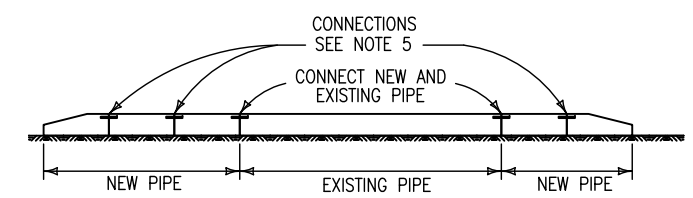

TYPICAL INSTALLATION

PIPE EXTENSION – TYPE 1 OR TYPE 2 CONNECTIONS

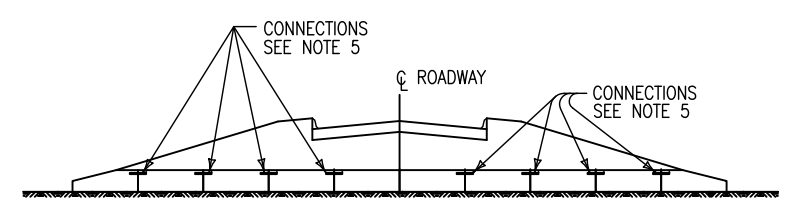

TYPICAL INSTALLATION

NEW CONSTRUCTION – TYPE 1 OR TYPE 2 CONNECTIONS

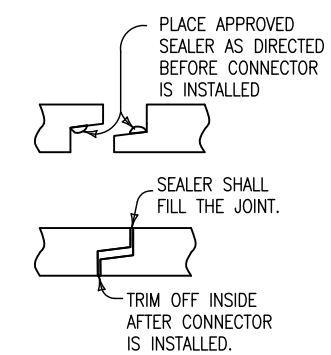

DETAILS OF SEALED JOINT

(TYPE 1 CONNECTION ONLY)

NOTES:
1. DETAILS ARE FOR TWO TYPES OF CONNECTIONS FOR CONCRETE CULVERT AND STORM SEWER PIPE. ALTERNATE DESIGNS, METHODS OR MATERIALS MAY BE SUBMITTED TO THE ENGINEER FOR APPROVAL.
2. THE TYPE 1 PIPE CONNECTION SHALL ORDINARILY BE USED AS SHOWN WITH TWO CONNECTORS NEAR THE TOP OF THE PIPE SECTION. ALL JOINTS WHERE TYPE 1 PIPE CONNECTIONS ARE USED SHALL BE SEALED. THE SEAL SHALL MEET THE REQUIREMENTS OF SECTION 02400.
3. THE TYPE 2 PIPE CONNECTION SHALL ORDINARILY BE USED AS SHOWN WITH TWO CONNECTORS NEAR THE TOP OF THE PIPE SECTION. NO JOINT SEALER IS REQUIRED WITH TYPE 2 CONNECTIONS.
4. REFER TO DETAIL PROJECT PLANS FOR ADDITIONAL DETAILS OF INDIVIDUAL INSTALLATION REQUIRING TYPE 1 OR TYPE 2 CONNECTIONS.
5. NORMAL INSTALLATION INCLUDES INSTALLING CONNECTIONS AT LAST 3 PIPE JOINTS PLUS FLARED END SECTION.

FILE NO.: 2400-023	CEDAR RAPIDS METROPOLITAN AREA STANDARD DETAILS FOR PUBLIC IMPROVEMENTS
APPROVAL DATE: AUG 1999	
REVISION NO.:	INSTALLATION OF CONNECTED PIPE JOINTS
REVISION DATE:	NO. 2400-023

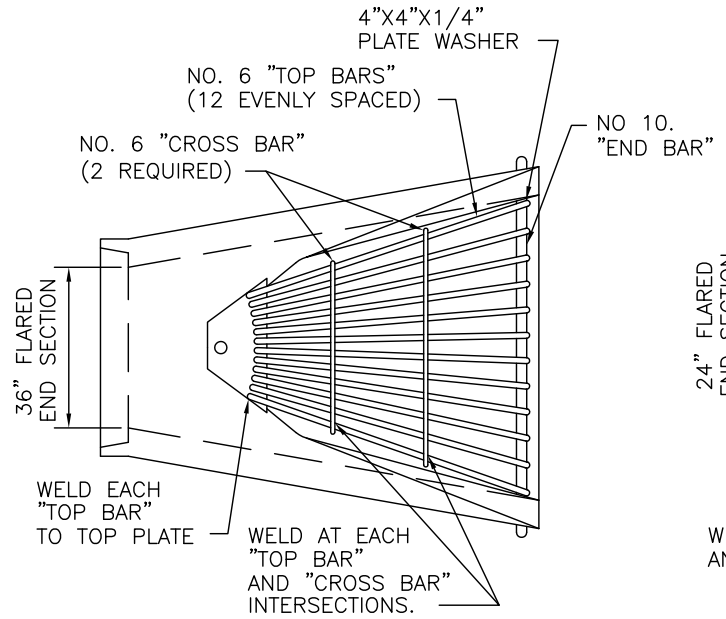

(36" DIAMETER FLARED END SECTION)
TYPICAL PLAN

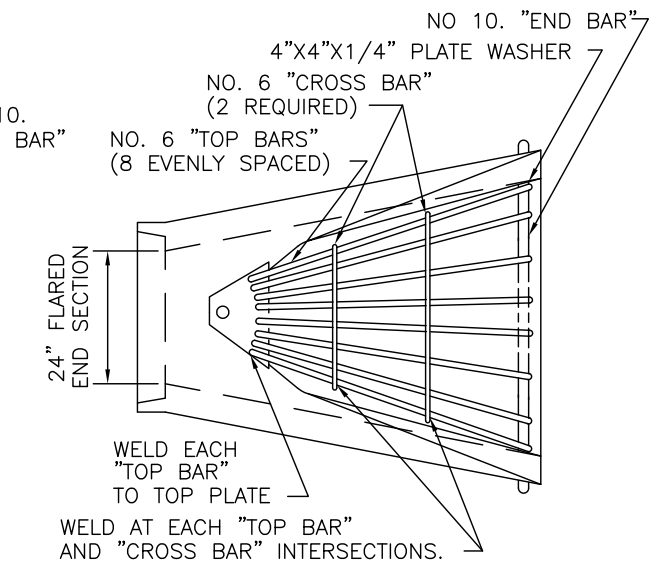

(24" DIAMETER FLARED END SECTION)
TYPICAL PLAN

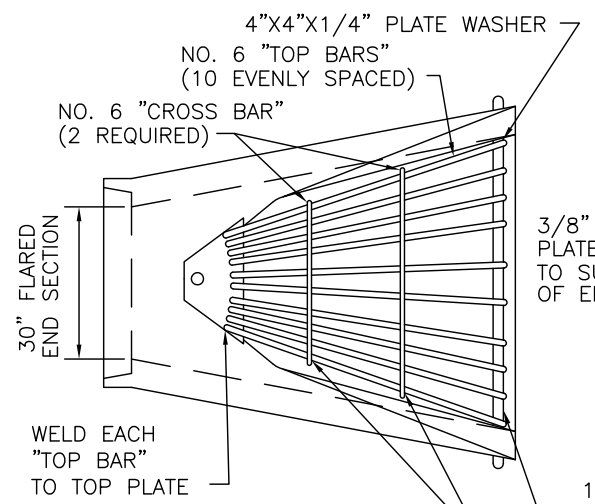

(30" DIAMETER FLARED END SECTION)
TYPICAL PLAN

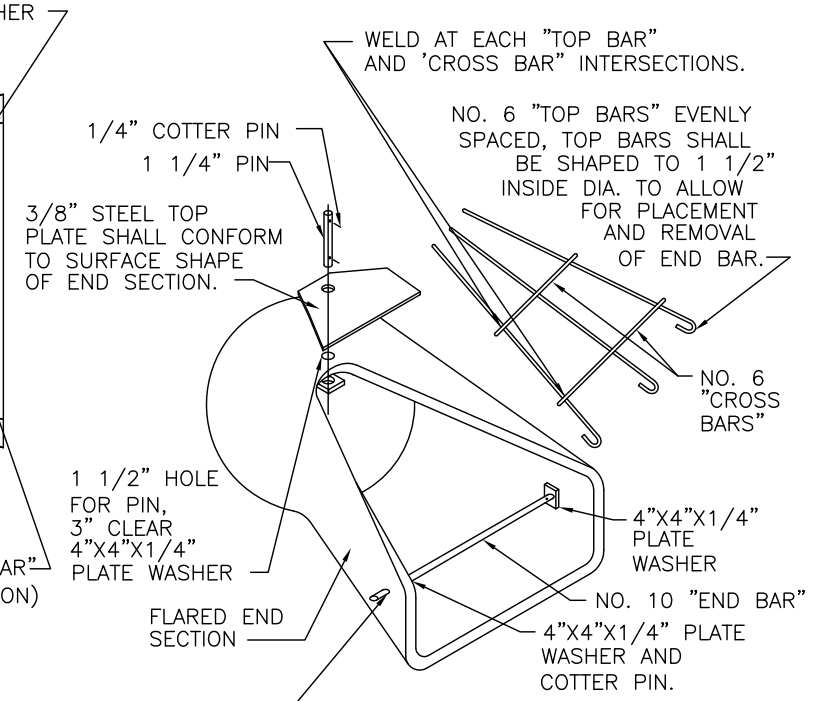

NOTES:
1. STEEL BARS USED IN CONSTRUCTION OF THE GUARD SHALL BE ASTM A615, GRADE 40, OR MERCHANT QUALITY, SMOOTH OR DEFORMED STEEL.
2. THE COMPLETED GUARD SHALL BE HOT-DIP GALVANIZED IN ACCORDANCE WITH CURRENT ASTM A123 SPECIFICATIONS.
3. FLARED END SECTION GUARDS FOR SIZES OTHER THAN SHOWN SHALL BE OF SIMILAR DESIGN AND SHALL CONFORM TO MINIMUM BAR SPACING AND OTHER REQUIREMENTS.

15" PIPE FLARED END SECTION, 6 "TOP BARS"
18" PIPE FLARED END SECTION, 7 "TOP BARS"
24" PIPE FLARED END SECTION, 8 "TOP BARS"
30" PIPE FLARED END SECTION, 10 "TOP BARS"
36" PIPE FLARED END SECTION, 12 "TOP BARS"

(TYPICAL FOR ALL TYPES OF
FLARED END SECTIONS)
INSTALLATION VIEW

FILE NO.: 2400-024	CEDAR RAPIDS METROPOLITAN AREA STANDARD DETAILS FOR PUBLIC IMPROVEMENTS
APPROVAL DATE: AUG 1999	
REVISION NO.:	FLARED END SECTION GUARD
REVISION DATE:	NO. 2400-024

PROJECT NO: HX0789	DRAWN BY: BGA APPROVED BY: GMH DATE: 10/10/2012	NO. REVISION DESCRIPTION	APPROVED DATE

ALLTRANS, INC.
4403 1st Avenue S.E.
Cedar Rapids, Iowa 52402
Phone: (319) 393-8726

City of Holy Cross Subdivision No.3
Dubuque County, Iowa

Legend, Standard Details, And Bench Mark Information

SHEET NO. B.14 OF B.17

F:\ACAD\HX0789\dwg\HX0789-B2.dwg 10-25-12 10:46:57 AM Ben Antons

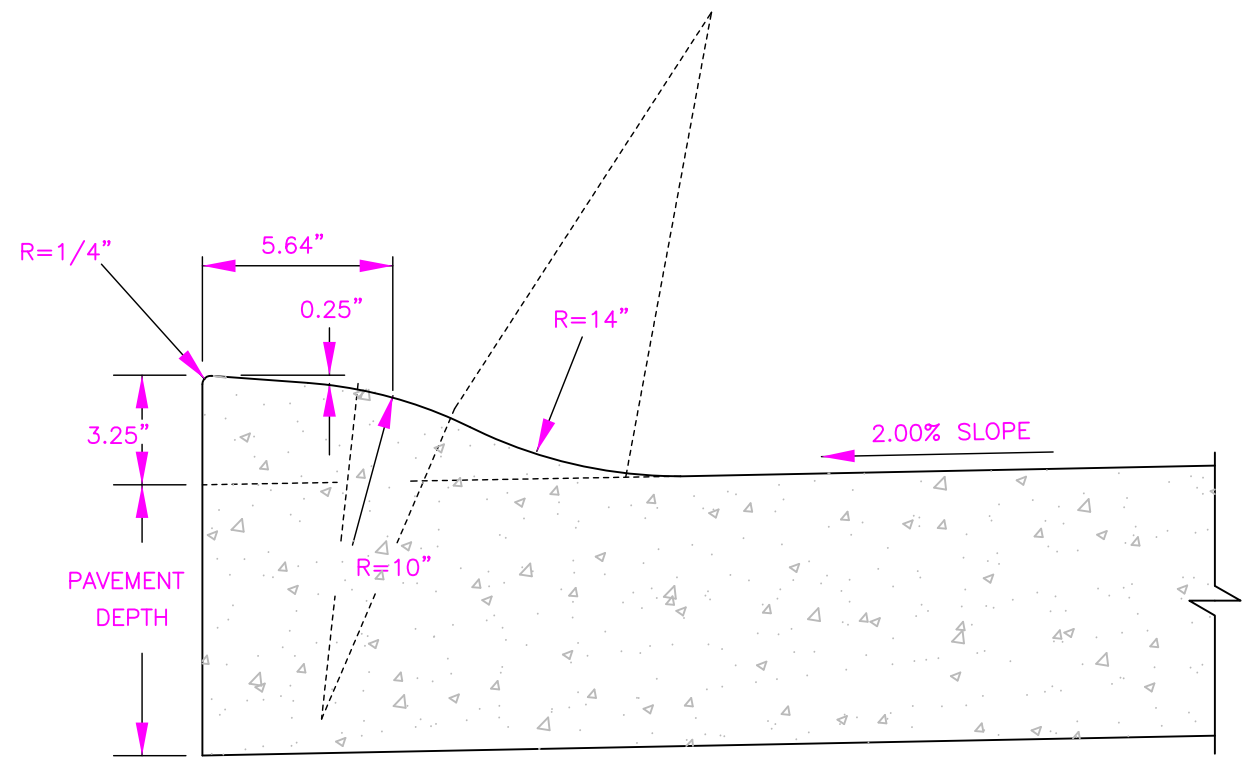

FILE NO.: 2700-010	CEDAR RAPIDS METROPOLITAN AREA STANDARD DETAILS FOR PUBLIC IMPROVEMENTS
APPROVAL DATE: AUG 1999	
REVISION NO.:	CURBING DETAILS — NO. 2700-010
REVISION DATE:	

PROJECT NO: HX0789	DRAWN BY: BGA APPROVED BY: GMH DATE: 10/10/2012	NO. / REVISION DESCRIPTION / APPROVED / DATE	ALLTRANS, INC. 4403 1st Avenue S.E. Cedar Rapids, Iowa 52402 Phone: (319) 393-8726	City of Holy Cross Subdivision No.3 Dubuque County, Iowa	Legend, Standard Details, And Bench Mark Information	SHEET NO. B.15 OF B.17

F:\ACAD\HX0789\dwg\HX0789-B2.dwg 10-25-12 10:47:15 AM Ben Antons

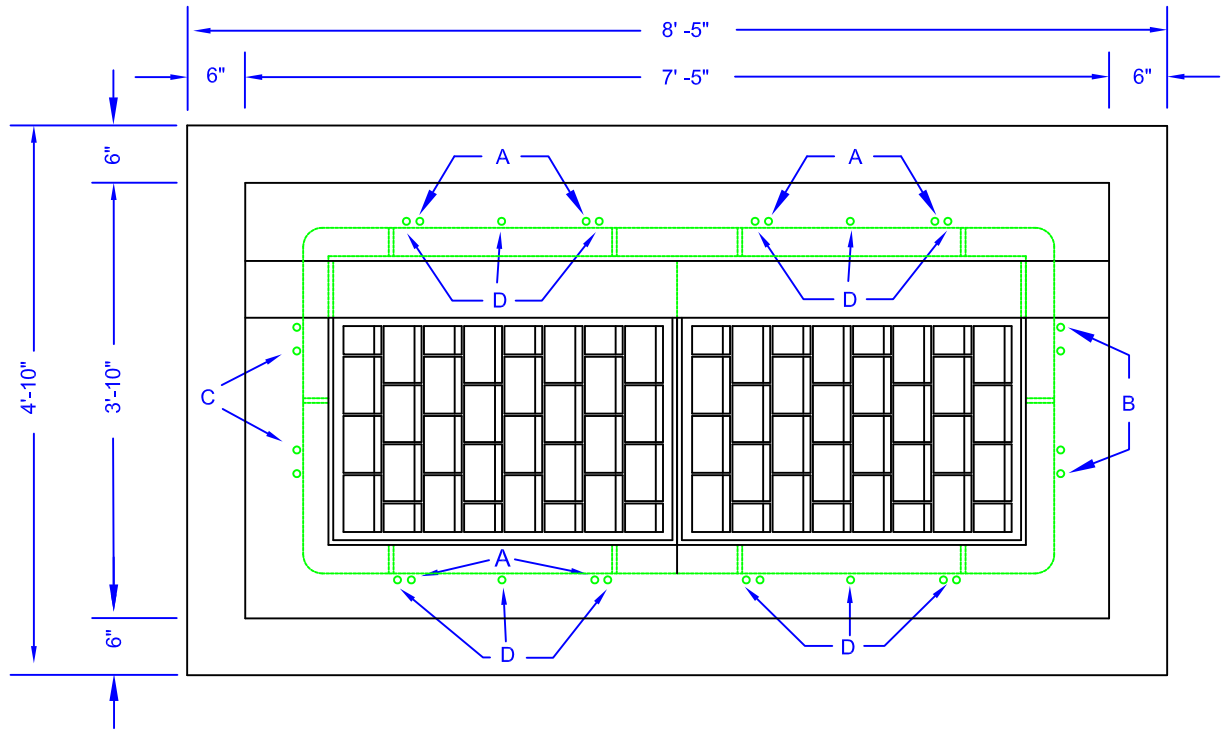

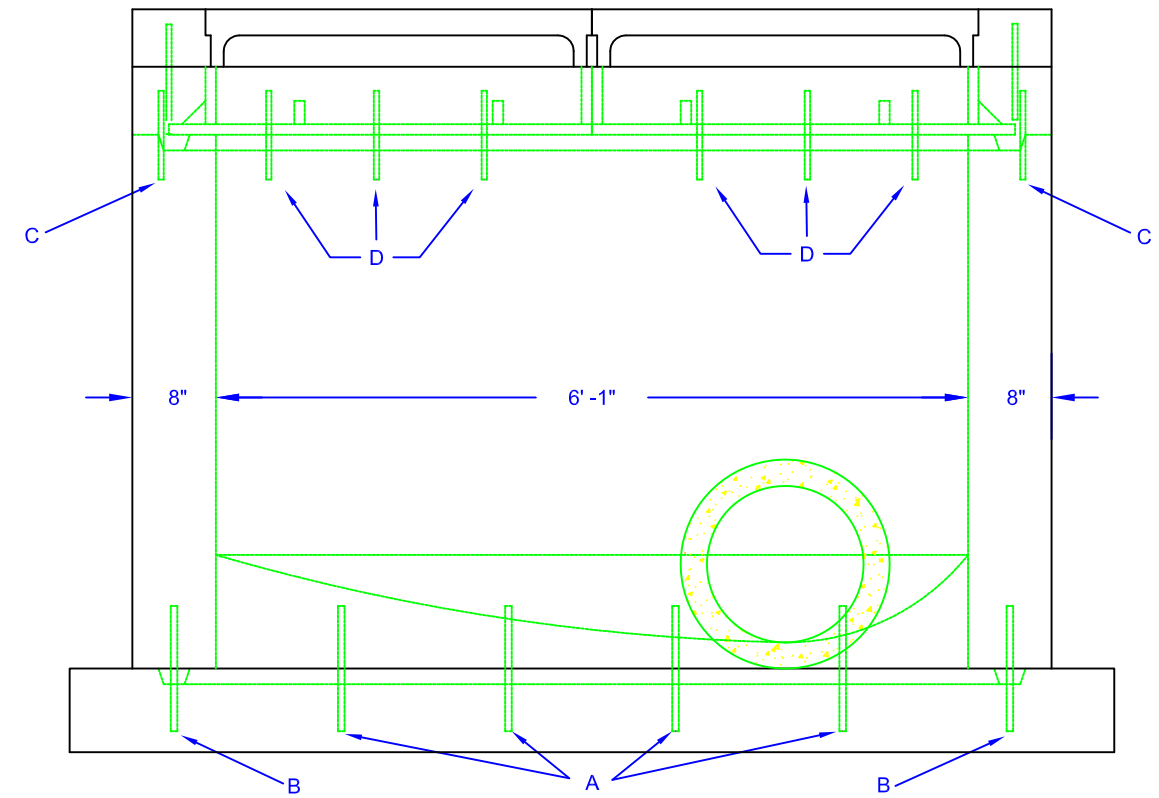

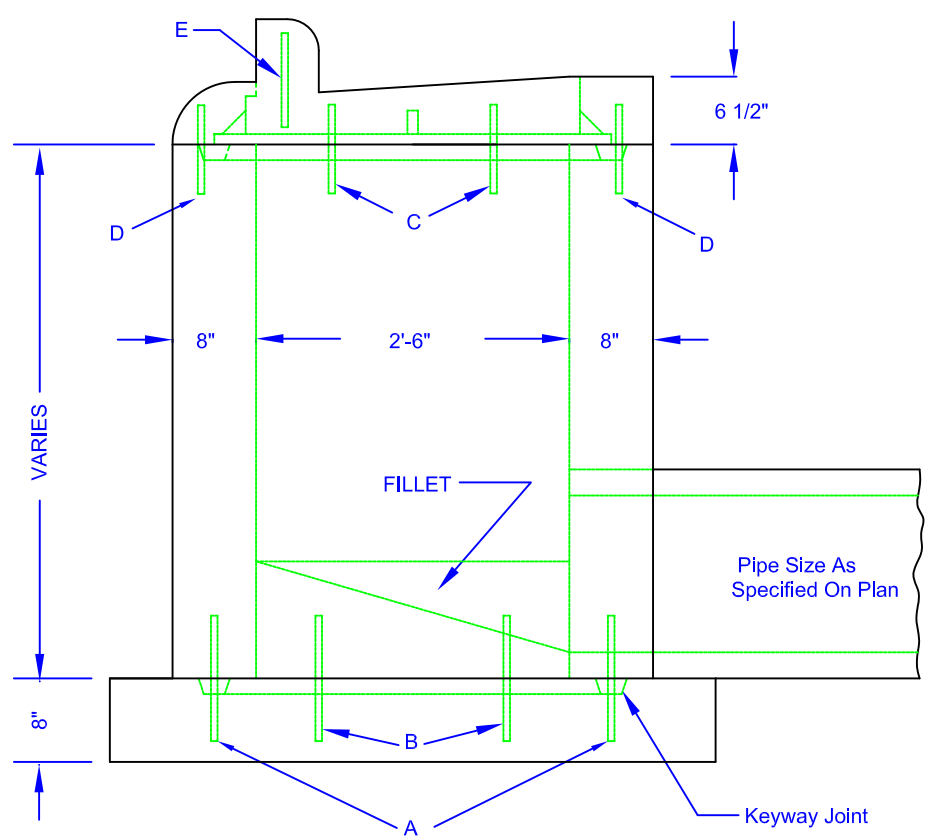

NOTES:

1. CATCH BASINS WILL BE BACKFILLED WITH SELECT MATERIAL APPROVED BY THE CITY. THIS MATERIAL SHALL BE MECHANICALLY COMPACTED IN 6" LIFTS. THE CONST OF THE CATCH BASIN SHOULD INCLUDE BACKFILLING. FRAMES USED IN THIS CATCH BASIN REQUIRE FLANGES TO BE REMOVED WHERE THEY BUTT TOGETHER. THE FRAMES SHALL BE BOLTED TOGETHER.

2. GRATES SHALL BE NEENAH 3246AL.

3. CATCH BASINS DEEPER THAN 6 FEET SHALL INCLUDE #4 BARS ON 12 INCH CENTERS IN BASE AND SIDEWALLS.

4. THE MINIMUM DEPTH FROM GUTTER TO FLOW LINE OF OUTLET PIPE SHALL BE 4.5 FOOT UNLESS OTHERWISE APPROVED.

5. INTAKE SHALL BE SEPARATED FROM ADJACENT RIGID PAVEMENTS BY 1" EXPANSION MATERIAL.

REINFORCING SCHEDULE

MARK	BAR SIZE	LENGTH	SPACING
A	#4	1'0"	17 1/2"
B	#4	1'0"	15"
C	#4	8-1/2"	10"
D	#4	8-1/2"	11"
E	#4	8-1/2"	

THE CITY OF DUBUQUE Showing the Spirit

CITY OF DUBUQUE
ENGINEERING DIVISION
CITY HALL, 50 WEST 13th STREET
DUBUQUE, IA 52001-4864
PHONE (563) 589-4270 FAX (563)589-4205

Drawn By: JIS | Approved By: | Date: 05/01/95

No. 101-B
GRATE TYPE CATCH BASIN

Appendex Number A2-1 | Sheet Number: 1 of 1

F:\ACAD\HX0789\dwg\HX0789-B2.dwg 10-25-12 10:47:37 AM Ben Antons

PROJECT NO: HX0789

DRAWN BY: BGA
APPROVED BY: GMH
DATE: 10/10/2012

NO.	REVISION DESCRIPTION	APPROVED	DATE

ALLTRANS, INC.
4403 1st Avenue S.E.
Cedar Rapids, Iowa 52402
Phone: (319) 393-8726

City of Holy Cross Subdivision No.3
Dubuque County, Iowa

Legend, Standard Details, And Bench Mark Information

SHEET NO. B.16 OF B.17

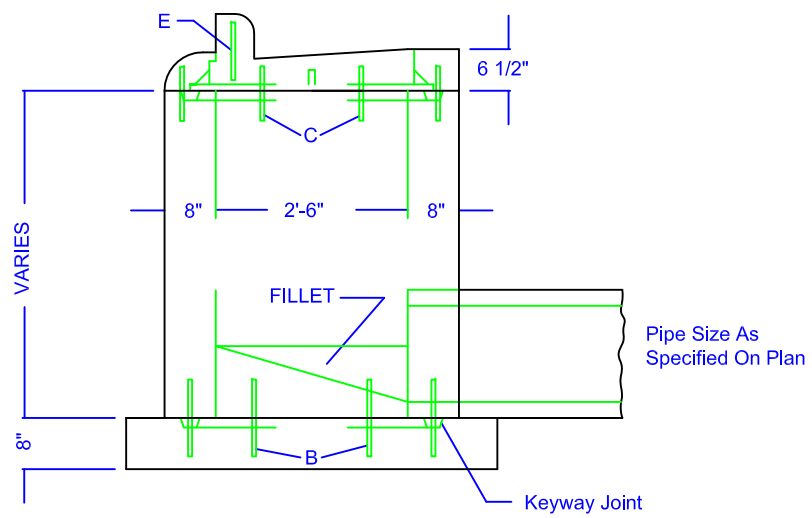

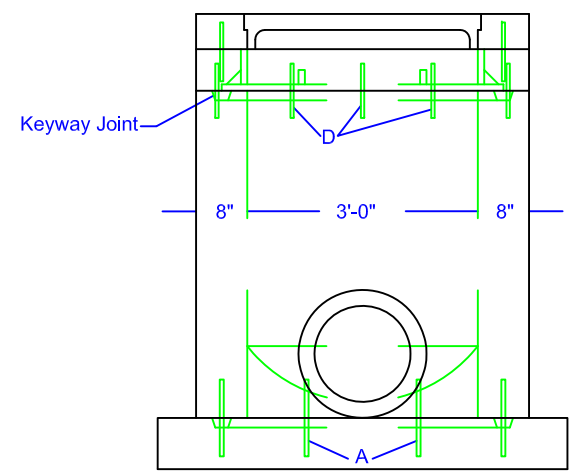

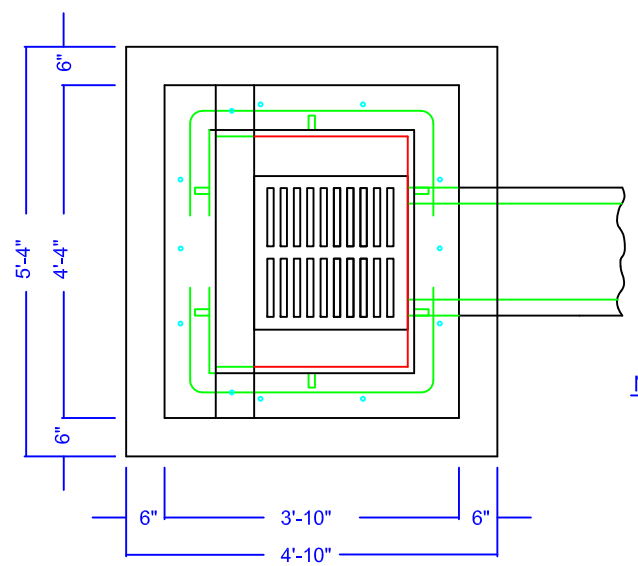

REINFORCING SCHEDULE

MARK	DIAMETER	LENGTH	NUMBER	SPACING
A	5/8"	1'-0"	4	17-1/2"
B	5/8"	1'-0"	4	15"
C	5/8"	1'-0"	4	10"
D	5/8"	1'-0"	6	11"
E	5/8"	0'-8"	2	

Notes:

1. Grates shall be Neenah R-3246AL, Asphalt coated or approved equal.
2. Catch Basins deeper than 6 ft. shall include #4 bars on 12 inch centers in base and sidewalls.
3. The minimum depth from gutter to intake base shall be 4.5' unless otherwise approved.
4. Catch Basins will be backfilled with select material approved by the city. This material shall be mechanically tamped in 6" lifts. The Catch Basin shall include backfilling.
5. Intake shall be separated from adjacent rigid pavements by 1" expansion material

THE CITY OF DUBUQUE
Showing the Spirit

CITY OF DUBUQUE
ENGINEERING DIVISION
CITY HALL, 50 WEST 13th STREET
DUBUQUE, IA 52001-4864
PHONE (563) 589-4270 FAX (563)589-4205

Drawn By: JIS | Approved By: | Date: 05/01/95

No. 101-B
GRATE TYPE CATCH BASIN

Appendex Number A2-1 | Sheet Number: 1 of 1

F:\ACAD\HX0789\dwg\HX0789-B2.dwg 10-25-12 10:47:55 AM Ben Antons

PROJECT NO: HX0789

DRAWN BY: BGA
APPROVED BY: GMH
DATE: 10/10/2012

NO.	REVISION DESCRIPTION	APPROVED	DATE

ALLTRANS, INC.
4403 1st Avenue S.E.
Cedar Rapids, Iowa 52402
Phone: (319) 393-8726

City of Holy Cross Subdivision No.3
Dubuque County, Iowa

Legend, Standard Details, And Bench Mark Information

SHEET NO. B.17 OF B.17

SANITARY SEWER MANHOLES								SANITARY SEWER PIPES									
1	2	3	4	5	6	7	9	10	PIPE ENDS		13	14	15	PIPE FLOWLINES			19
STRUCTURE NO.	STATION	OFFSET	TYPE	RIM ELEV.	LOWEST FL ELEV.	FINISHED DEPTH	NOTES	PIPE NO.	11 FROM	12 TO	PIPE DIA. IN.	PIPE LENGTH FT	PIPE SLOPE %	16 IN	17 OUT	18 EXISTING FL	NOTES
MH-SS1	08+20.0	25.6	MANHOLE	533.79	520.09	13.70	MANHOLE										
								P-1	MH-SS1	MH-ES1	8	220	0.60	520.09	518.77	518.67	
MH-ES1	05+96.6	26.5	MANHOLE	526.76	518.67	8.09	EX MANHOLE										
MH-SS2	45+73.4	28.5	MANHOLE	525.80	513.75	12.05	MANHOLE										
								P-2	MH-SS2	MH-SS3	8	329	2.00	513.75	507.17		
MH-SS3	42+41.1	30.8	MANHOLE	518.40	507.07	11.33	MANHOLE										
								P-3	MH-SS3	MH-SS4	8	268	0.50	507.07	505.73		
MH-SS4	25+21.5	26.7	MANHOLE	512.23	505.63	6.60	MANHOLE										
SS-CO	27+37.6	27.1	Clean Out	522.14	507.12	15.02	Clean Out										
								P-4	SS-CO	MH-SS4	8	217	0.64	507.12	505.73	505.86	
MH-SS4	25+21.5	26.7	MANHOLE	512.23	505.63	6.60	MANHOLE										
								P-5	MH-SS4	Ex-Pipe End	8	13	7.92	505.63	504.60	504.60	Pipe End
Ex-Pipe End	25+10.9	26.7	Pipe End		504.6		Ex-Pipe										
											Total	**1047**					

Modify Rim Elevation of MH-E2 from Existing 509.96 to 511.50

Water Main Tabulations

1	2	3	4		5	6	PIPE ENDS		9	10	11
Item No.	Apparatus	STATION	OFFSET	SIDE	NOTE	PIPE NO.	7 FROM	8 TO	PIPE CLASS	PIPE DIA. IN.	PIPE LENGTH FT
1	Valve	04+77.4	27.35	LT.	Existing						
						WM-1	Valve	45deg Bend	C900	6	3.0
2	45deg Bend	04+80.6	27.35	LT.							
						WM-2	45ceg Bend	45deg Bend	C900	6	7.7
3	45deg Bend	04+86.0	21.9	Lt							
						WM-3	45ceg Bend	6"x6" Tee	C900	6	141.5
	6"x6" Tee	06+25.6	21.9	Rt							
						WM-3A	6"x6" Tee	Hydrant Assembly	C900	6	34.5
4	Hydrant Assembly	06+81.9	21.9	LT.							
						WM-4	Hydrant Assembly	Valve	C900	6	4.7
5	Valve	06+86.6	21.9	LT.							
						WM-5	Valve	Hydrant Assembly	C900	6	129.1
6	Hydrant Assembly	08+14.2	21.9	LT.							
7	Valve	23+92.4	25.56	LT.	Existing						
						WM-6	Valve	45deg Bend	C900	6	2.5
8	45deg Bend	23+94.8	25.56	Lt							
						WM-7	45ceg Bend	45deg Bend	C900	6	4.0
9	45deg Bend	23+97.3	23	Lt							
						WM-8	45ceg Bend	6"x6" Tee	C900	6	170.0
10	6"x6" Tee	25+65.2	23	LT.							
						WM-9	6"x6" Tee	Valve	C900	6	13.1
11	Valve	25+78.3	23	LT.							
						WM-10	Valve	Hydrant Assembly	C900	6	159.6
12	Hydrant Assembly	27+37.9	23	LT.							
13	6"x6" Tee	47+12.0	22.0	RT.							
						WM-11	6"x6" Tee	Valve	C900	6	5.0
14	Valve	47+07.0	22.0	RT.							
						WM-12	Valve	Valve	C900	6	357.0
15	Valve	43+50.0	22.0	RT.							
						WM-13	Valve	Hydrant Assembly	C900	6	5.0
16	Hydrant Assembly	43+44.9	22.0	RT.							
						WM-14	Hydrant Assembly	Hydrant Assembly	C900	6	310.5
17	Hydrant Assembly	40+34.4	22.0	RT.							
						WM-15	Hydrant Assembly	Valve	C900	6	5.0
18	Valve	40+29.4	22.0	RT.							
						WM-16	Valve	6"x6" Tee	C900	6	6.6
19	6"x6" Tee	40+22.8	22.0	RT.							
											1359

SANITARY SEWER SERVICES

ITEM #	STREET	STATION	SIDE	DOWNSTREAM	DISTANCE FROM	LENGTH
	ARTHUR ST			MANHOLE	DOWNSTREAM MH	
		08+17.7		MH -SS1		
1		07+12.0	Lt		115.4	58
		05+96.6		MH-ES1		
2		05+87.0	Lt		326.4	58
3		05+40.0	Lt		279.4	58
		02+60.6		MH-ES3		
	HICKORY ST					
		45+73.4		MH-SS2		
4		45+61.0	Lt		319.9	9
5		45+58.0	Rt		316.9	53
6		44+79.0	Lt		237.9	9
7		44+76.0	Rt		234.9	53
8		43+74.0	Lt		132.9	9
9		43+71.0	Rt		129.9	53
10		42+71.0	Lt		29.9	9
11		42+68.0	Rt		26.9	53
		42+41.1		MH-SS3		
12		41+67.0	Lt		193.5	9
13		41+64.0	Rt		190.5	53
14		40+64.0	Lt		90.5	9
15		40+61.0	Rt		87.5	53
		39+73.5		MH-SS4		
	ANNA ST					
		27+37.6		SSCO	216.1	
16		25+69.0	Rt		47.5	16
17		25+29.0	Rt		7.5	16
		25+21.5		MH-SS4		
		21+74.7		Ex-Manhole	346.7	
						578

WATER SERVICES

ITEM #	STREET	STATION	SIDE	LENGTH
	ARTHUR ST			
1		05+12.0	Lt	18
2		06+25.0	Lt	18
3		07+38.0	Lt	18
	HICKORY ST			
4		46+06.0	Lt	62
5		46+03.0	RT	18
6		45+01.0	Lt	62
7		44+98.0	RT	18
8		43+98.0	Lt	62
9		43+95.0	RT	18
10		42+93.0	Lt	62
11		42+90.0	RT	18
12		41+90.0	Lt	62
13		41+87.0	RT	18
14		40+85.0	Lt	62
15		40+82.0	Rt	18
	ANNA ST			
16		24+56.0	Rt	62
17		26+32.0	RT	62
				658

F:\ACAD\HX0789\dwg\hx0789-C1C2.dwg 10-19-12 11:02:38 AM Ben Antons

PROJECT NO: HX0789

DRAWN BY: BGA
APPROVED BY: GMH
DATE: 10/10/2012

NO.	REVISION DESCRIPTION	APPROVED	DATE

ALLTRANS, INC.
4403 1st Avenue S.E.
Cedar Rapids, Iowa 52402
Phone: (319) 393-8726

City of Holy Cross Subdivision No.3
Dubuque County, Iowa

Sanitary Sewer & Water Tabulations

SHEET NO. C.01 OF C.06

INTAKES AND MANHOLES										STORM SEWER PIPES											FORMULAS											
1	2	3	4	5	6	7	8	9	10	11	PIPE ENDS		14	15	16	17	PIPE FLOWLINES			21	22	23	24	TOTAL AREA		27	28	29	30	31	32	33
STRUCTURE NO.	STATION	OFFSET	TYPE	CL ELEV.	FORM. GRADE ELEV.	LOWEST FL ELEV.	BOTTOM WELL	DEPTH	NOTE	PIPE NO.	12 FROM	13 TO	PIPE CLASS	PIPE DIA. IN.	PIPE LENGTH FT	PIPE SLOPE %	18 IN	19 OUT	20 DITCH OR APRON	NOTE	DRAINAGE AREA ACRES	COEFF. IMPERV. C	EQUIV. 100% ACRES	25 BRANCH ACRES	26 MAIN ACRES	TIME OF CONC. Tc	RAIN INTENS. IN/HR	10-YR FLOW CFS	VELOC. FULL FT/S	PIPE CAPACITY CFS	MEETS DESIGN?	TIME IN PIPE MIN
I-1	04+83.6	15.5	Catch Basin No. 101-B	522.93	522.62	519.10	518.60	4.02																								
										P-1	I-1	I-2	2000D	15	25	0.60	519.10	518.95			1.44	0.50	0.72	0.00	0.72	23.00	4.06	2.92	4.42	5.42	OK	0.09
I-2	04+80.8	15.5	Catch Basin No. 101-B	522.83	522.52	518.95	518.45	4.07																								
										P-2	I-2	MH-1	2000D	15	14	0.70	518.95	518.85			0.34	0.50	0.17	0.72	0.89	23.09	4.05	3.60	4.77	5.86	OK	0.05
MH-1	04+65.8	20.7	48" Manhole	522.30		518.85	518.35	4.11	Rim=522.46																							
										P-MH1	MH-1	MH-2	Plastic	15	321	4.80	518.85	503.44			0.00	0.50	0.00	0.89	0.89	23.14	4.05	3.60	12.49	15.33	OK	0.43
I-3	43+44.9	15.5	Catch Basin No. 104-B	520.25	519.94	516.42	515.92	4.02																								
										P-3	I-3	I-4	2000D	15	25	0.60	516.42	516.27			1.55	0.50	0.78	0.00	0.78	13.80	5.07	3.93	4.42	5.42	OK	0.09
I-4	43+45.1	15.5	Catch Basin No. 104-B	520.26	519.95	516.27	515.77	4.18																								
										P-4	I-4	MH-2	Plastic	15	145	8.85	516.27	503.44			0.71	0.50	0.36	0.78	1.13	13.89	5.05	5.71	16.96	20.81	OK	0.14
MH-2	43+45.8	161.9	48" Manhole	520.27	..	503.44	502.94	4.06	Rim=507.00																							
										P-MH2	MH-2	I-9	Plastic	15	329	2.30	503.44	495.88			0.00	0.50	0.00	2.02	2.02	23.57	4.01	8.10	8.65	10.61	OK	0.63
I-9	23+80.7	15.5	Catch Basin No. 101-B	499.72	499.41	495.68	495.18	4.23																								
										P-9	I-9	I-10	2000D	18	25	2.00	495.68	495.18			0.61	0.50	0.31	2.02	2.33	24.21	3.96	9.21	9.11	16.09	OK	0.05
I-10	23+77.9	15.5	Catch Basin No. 101-B	499.44	499.13	.	.	.																								
I-5	40+44.9	15.5	Catch Basin No. 104-B	513.57	513.26	509.74	509.24	4.02																								
										P-5	I-5	I-6	2000D	15	25	0.60	509.74	509.59		Hickory	1.17	0.50	0.59	0.00	0.59	13.90	5.05	2.95	4.42	5.42	OK	0.09
I-6	40+44.5	15.5	Catch Basin No. 104-B	513.57	513.26	509.59	509.09	4.17																								
										P-6	I-6	I-7	2000D	15	41	8.00	509.59	506.31		Hickory	0.66	0.50	0.33	0.59	0.92	13.99	5.05	4.62	16.13	19.79	OK	0.04
I-7	25+86.3	15.5	Catch Basin No. 101-B	510.31	510.00	506.31	505.81	4.19																								
										P-7	I-7	I-8	2000D	15	26	1.20	506.31	506.00		Anna St	1.13	0.50	0.57	0.92	1.48	14.04	5.00	7.40	6.25	7.67	OK	0.07
I-8	25+83.3	15.5	Catch Basin No. 101-B	510.01	509.70	506.00	505.50	4.20																								
										P-8	I-8	I-10	2000D	15	113	9.40	506.00	495.38			0.47	0.50	0.24	1.48	1.72	14.11	4.98	8.54	17.48	21.46	OK	0.11
I-10	23+77.9	15.5	Catch Basin No. 101-B	499.44	499.13	495.18	494.68	4.45																								
										P-10	I-10	Apron	Plastic	18	184	3.60	495.18	488.55	488.00	IDOT Ditch	0.26	0.50	0.13	4.04	4.17	24.25	4.89	20.39	12.22	21.59	OK	0.25
I-11	43+46.6	237.6	Grate	..					Rim=499																							
										P-11	I-11	I-ex	Plastic	15	86																	
I-ex			Catch Basin No. 101-B	499.30	499.00																											

SUBDRAIN SERVICES (6")				
ITEM #	STREET	STATION	SIDE	LENGTH
	ARTHUR ST			
1		04+86.6	Lt	24
2		05+78.8	Lt	24
3		06+91.8	Lt	24
	HICKORY ST			
4		45+63.0	Lt	24
5		45+63.0	RT	24
6		44+59.0	Lt	24
7		44+59.0	RT	24
8		43+55.0	Lt	24
9		43+55.0	RT	24
10		42+51.0	Lt	24
11		42+51.0	RT	24
12		41+47.0	Lt	24
13		41+47.0	RT	24
14		40+49.0	Lt	24
15		40+40.0	Rt	24
	ANNA ST			
16		23+83.0	Rt	24
17		25+54.0	RT	24
				408

Item No.	Item	Unit	Quantity
1	Mobilization	LS	1
2	Trench Compaction Testing	LS	1
3	Subgrade and Subbase Compaction Testing	LS	1
4	Traffic Control	LS	1
5	Permanent Signs	EA	8
6	Sign Posts	EA	8
7	Temporary Erosion and Sediment Controls (Including Silt Fence)	LS	1
8	Remove Fence (950 lf)	LS	1
9	Rock Excavation	CY	200
10	Unclassified Excavation and Embankment	CY	20,000
11	Strip and Respread Topsoil	CY	5,250
12	Subgrade Preparation	SY	5,272
13	Subbase	SY	5,077
14	Storm Sewer Main, 15-Inch Dia. RCP	LF	269
15	Storm Sewer Main, 15-Inch Dia. Plastic	LF	881
16	Storm Sewer Main, 18-Inch Dia. RCP	LF	25
17	Storm Sewer Main, 18-Inch Dia. Plastic	LF	184
18	Bee-Hive Intake	EA	1
19	Subdrain, 6" (wrapped with fabric), and 17 Service T's	LF	2,650
20	Subdrain Cleanouts	EA	8
21	Storm Sewer Manholes	EA	2
22	Storm Sewer Intakes (101-B)	EA	7
23	Storm Sewer Intakes (104-B)	EA	4
24	Water Main, C900 6"	LF	1,359
25	Valve and Box (6" Gate)	EA	5
26	45 Deg Bend	EA	4
27	Water Services (1" Trenched) (Total 17 Services, 660 lf)	Ea	17
28	Fire Hydrant Assembly	EA	3
29	Fire Hydrant to be Relocated	EA	2
30	Disinfection and Hydrostatic Testing	LS	1
31	Sanitary Sewer Manholes	EA	3
32	Sanitary Sewer Manholes to be Relocated	EA	1
33	Sanitary Sewer Main 8" Truss	LF	1,047
34	Sanitary Sewer Services (4" Trenched) (Total 17 Services, 580 LF)	EA	17
35	Portland Cement Concrete Pavement, Non-Reinforced (7")	SY	4,615
36	Seeding	LS	1

F:\ACAD\HX0789\dwg\hx0789-C1C2.dwg 11-08-12 02:17:54 PM Ben Antons

PROJECT NO: HX0789

DRAWN BY: BGA
APPROVED BY: GMH
DATE: 10/10/2012

NO.	REVISION DESCRIPTION	APPROVED	DATE

ALLTRANS, INC.
4403 1st Avenue S.E.
Cedar Rapids, Iowa 52402
Phone: (319) 393-8726

City of Holy Cross Subdivision No.2
Dubuque County, Iowa

Storm Sewer Tabulations

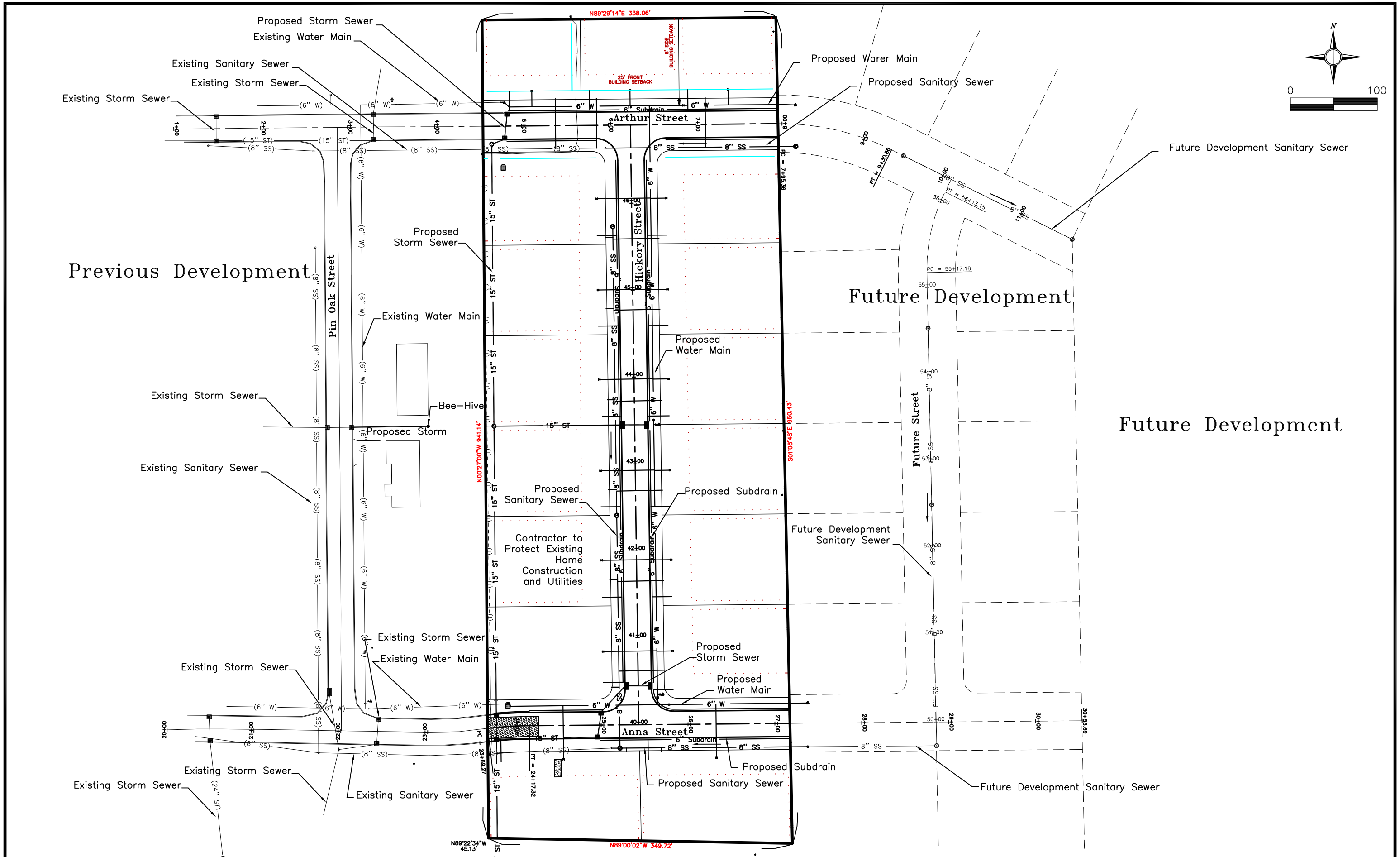

PROJECT NO: HX0789	DRAWN BY: BGA APPROVED BY: GMH DATE: 10/10/2012	NO.	REVISION DESCRIPTION	APPROVED	DATE

ALLTRANS, INC.
4403 1st Avenue S.E.
Cedar Rapids, Iowa 52402
Phone: (319) 393-8726

City of Holy Cross Subdivision No.2
Dubuque County, Iowa

Overall Plan

SHEET NO. C.03 OF C.06

F:\ACAD\HX0789\dwg\hx0789-C3C4.dwg 11-08-12 02:15:37 PM Ben Antons

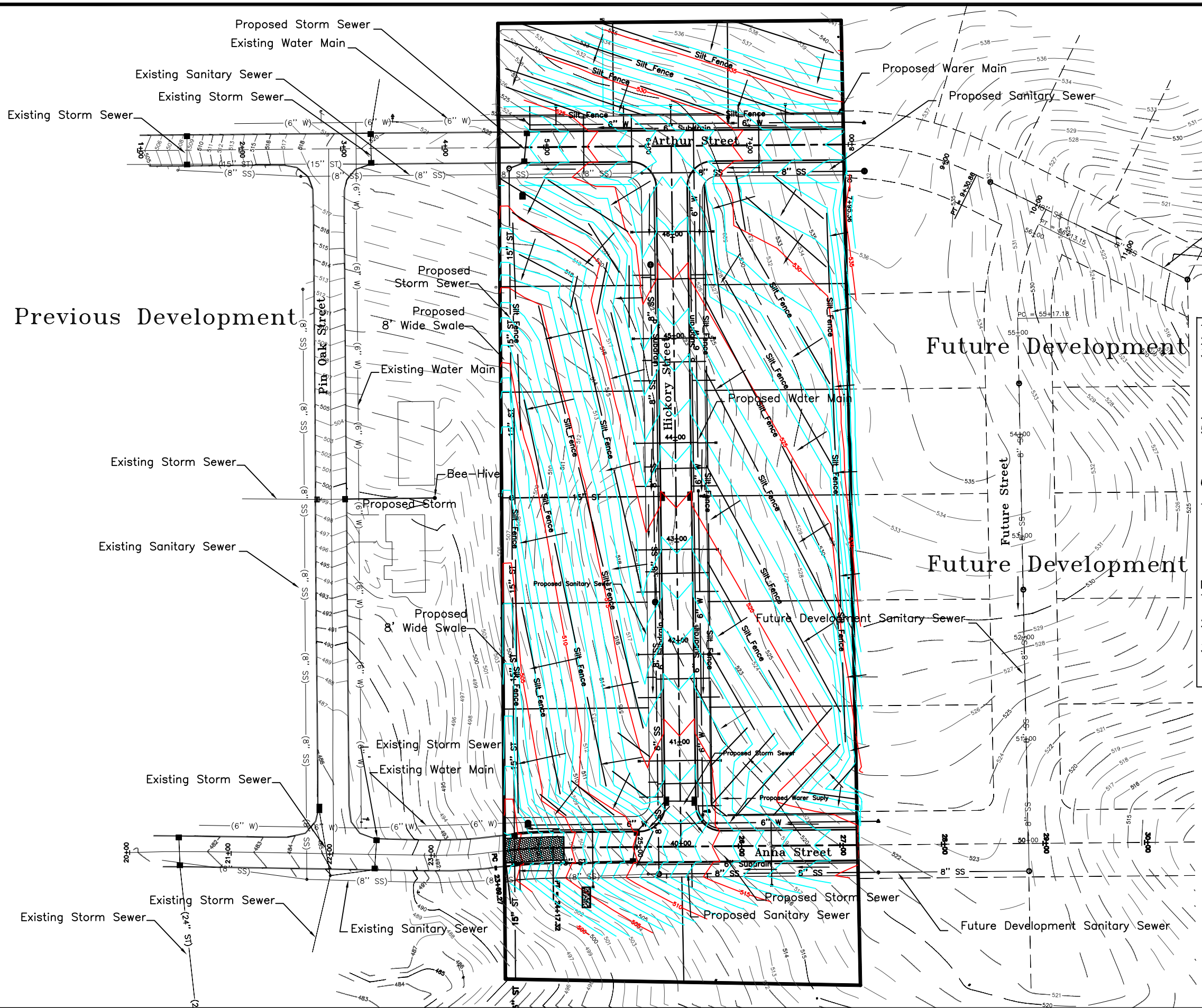

SEQUENCE OF EROSION CONTROL AND SEDIMENT CONTROL EVENTS

1. INSTALL STABILIZED CONSTRUCTION ENTRANCE.
2. INSTALL SILT FENCE.
3. APPLY TEMPORARY SEED TO ALL DENUDED AREAS WHERE CONSTRUCTION ACTIVITY TEMPORARILY CEASES FOR 14 DAYS OR MORE. FERTILIZE AND LIME AS RECOMMENDED, IF NEEDED. APPLY MULCH ON SLOPES GREATER THAN 4:1
4. DESTROY TEMPORARY SEEDING
5. APPLY RECOMMENDED PERMANENT SEEDING OR CONTACT LOCAL SOIL CONSERVATION SERVICE FOR ADDITIONAL MIXES. FERTILIZE AND LIME AT RECOMMENDED RATES, IF NEEDED.
6. APPLY MULCH AT 1.5 – 2 TONS/ACRE ON SLOPES GREATER THAN 4:1
7. WHEN CONSTRUCTION IS COMPLETE & SITE IS STABILIZED WITH PERMANENT SEEDING, REMOVE ACCUMULATED SEDIMENT FROM SILT FENCE THEN REMOVE FENCE AND RESEED ANY AREAS DISTURBED BY THEIR REMOVAL.

NOTES:

1. WHENEVER POSSIBLE, EXISTING VEGETATION SHALL BE LEFT UNDISTURBED.
2. ALL DISTURBED AREAS SHALL BE STABILIZED IMMEDIATELY AFTER GRADING CEASES.
3. DEVELOPER WILL MAKE ARRANGEMENTS TO SEE THE EC AND SC PRACTICES ARE IN PLACE AND BEING PROPERLY MAINTAINED.

EROSION AND SEDIMENT CONTROL INSPECTION AND MAINTENANCE PRACTICES

1. LESS THAN 1/2 OF THE SITE SHALL BE DENUDED AT ONE TIME.
2. ALL CONTROL MEASURES SHALL BE INSPECTED AT LEAST ONCE EACH WEEK AND FOLLOWING ANY STORM EVENT OF 0.5 INCHES OR GREATER.
3. ALL MEASURES SHALL BE MAINTAINED IN GOOD WORKING ORDER; IF A REPAIR IS NECESSARY, IT SHALL BE INITIATED WITHIN 24 HOURS OF REPORT.
4. BUILT UP SEDIMENT WILL BE REMOVED FROM SILT FENCE WHEN IT HAS REACHED ONE THIRD THE HEIGHT OF THE FENCE.
5. SILT FENCE SHALL BE INSPECTED FOR DEPTH OF SEDIMENT, TEARS, TO SEE IF THE FABRIC IS SECURELY ATTACHED TO THE FENCE POSTS, AND TO SEE THAT THE FENCE POSTS ARE FIRMLY IN THE GROUND.
6. TEMPORARY AND PERMANENT SEEDING AND PLANTING SHALL BE INSPECTED FOR BARE SPOTS, WASHOUTS, AND HEALTHY GROWTH.

PROJECT NO: HX0789	DRAWN BY: BGA APPROVED BY: GMH DATE: 10/10/2012	NO.	REVISION DESCRIPTION	APPROVED	DATE

ALLTRANS, INC.
4403 1st Avenue S.E.
Cedar Rapids, Iowa 52402
Phone: (319) 393-8726

City of Holy Cross Subdivision No.3
Dubuque County, Iowa

Grading Plan

SHEET NO. C.04 OF C.06

F:\ACAD\HX0789\dwg\hx0789-C3C4.dwg 10-19-12 11:04:22 AM Ben Antons

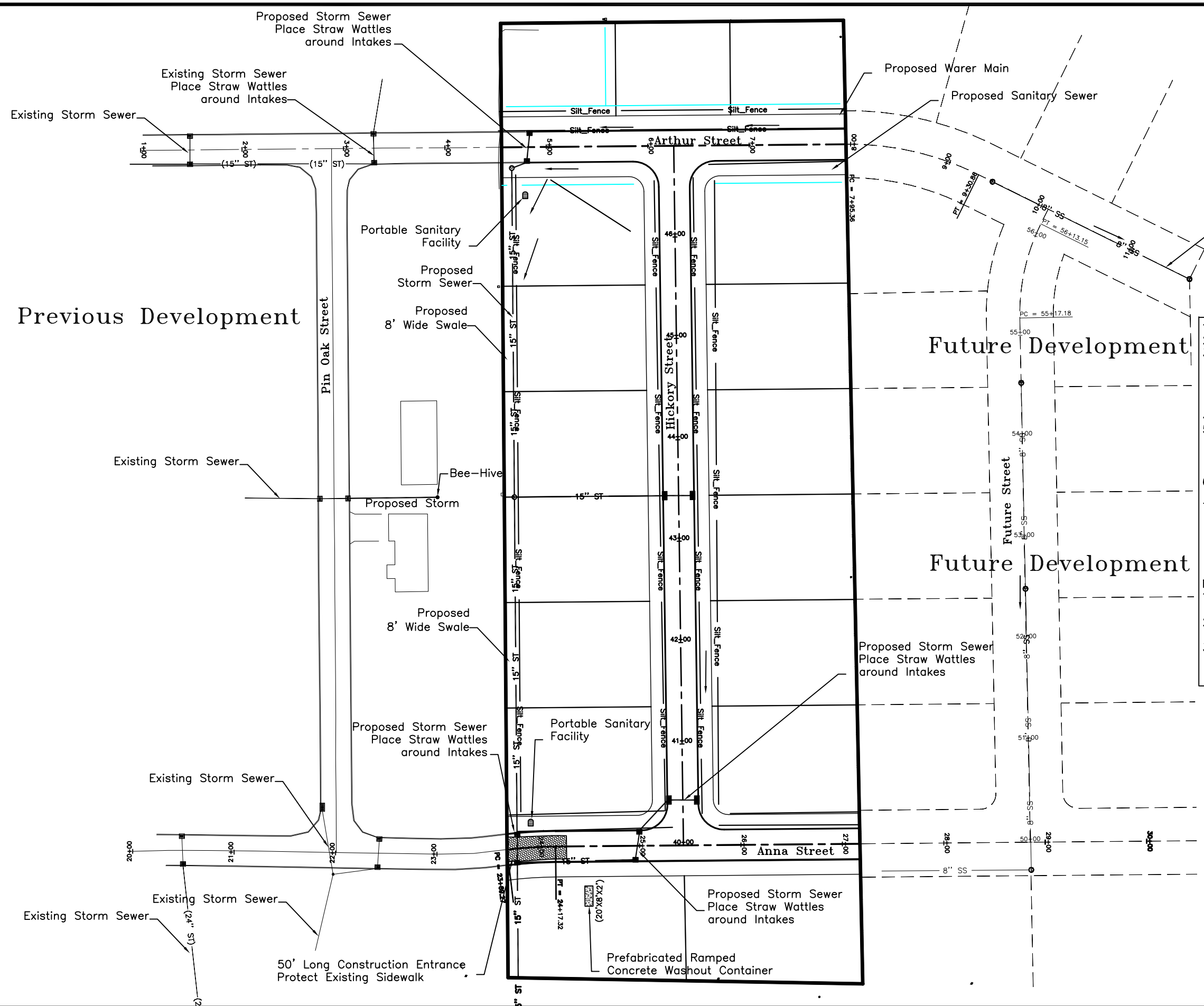

SEQUENCE OF EROSION CONTROL AND SEDIMENT CONTROL EVENTS

1. INSTALL STABILIZED CONSTRUCTION ENTRANCE.
2. INSTALL SILT FENCE.
3. APPLY TEMPORARY SEED TO ALL DENUDED AREAS WHERE CONSTRUCTION ACTIVITY TEMPORARILY CEASES FOR 14 DAYS OR MORE. FERTILIZE AND LIME AS RECOMMENDED, IF NEEDED. APPLY MULCH ON SLOPES GREATER THAN 4:1
4. DESTROY TEMPORARY SEEDING
5. APPLY RECOMMENDED PERMANENT SEEDING OR CONTACT LOCAL SOIL CONSERVATION SERVICE FOR ADDITIONAL MIXES. FERTILIZE AND LIME AT RECOMMENDED RATES, IF NEEDED.
6. APPLY MULCH AT 1.5 – 2 TONS/ACRE ON SLOPES GREATER THAN 4:1
7. WHEN CONSTRUCTION IS COMPLETE & SITE IS STABILIZED WITH PERMANENT SEEDING, REMOVE ACCUMULATED SEDIMENT FROM SILT FENCE THEN REMOVE FENCE AND RESEED ANY AREAS DISTURBED BY THEIR REMOVAL.

NOTES:

1. WHENEVER POSSIBLE, EXISTING VEGETATION SHALL BE LEFT UNDISTURBED.
2. ALL DISTURBED AREAS SHALL BE STABILIZED IMMEDIATELY AFTER GRADING CEASES.
3. DEVELOPER WILL MAKE ARRANGEMENTS TO SEE THE EC AND SC PRACTICES ARE IN PLACE AND BEING PROPERLY MAINTAINED.

EROSION AND SEDIMENT CONTROL INSPECTION AND MAINTENANCE PRACTICES

1. LESS THAN 1/2 OF THE SITE SHALL BE DENUDED AT ONE TIME.
2. ALL CONTROL MEASURES SHALL BE INSPECTED AT LEAST ONCE EACH WEEK AND FOLLOWING ANY STORM EVENT OF 0.5 INCHES OR GREATER.
3. ALL MEASURES SHALL BE MAINTAINED IN GOOD WORKING ORDER; IF A REPAIR IS NECESSARY, IT SHALL BE INITIATED WITHIN 24 HOURS OF REPORT.
4. BUILT UP SEDIMENT WILL BE REMOVED FROM SILT FENCE WHEN IT HAS REACHED ONE THIRD THE HEIGHT OF THE FENCE.
5. SILT FENCE SHALL BE INSPECTED FOR DEPTH OF SEDIMENT, TEARS, TO SEE IF THE FABRIC IS SECURELY ATTACHED TO THE FENCE POSTS, AND TO SEE THAT THE FENCE POSTS ARE FIRMLY IN THE GROUND.
6. TEMPORARY AND PERMANENT SEEDING AND PLANTING SHALL BE INSPECTED FOR BARE SPOTS, WASHOUTS, AND HEALTHY GROWTH.

F:\ACAD\HX0789\dwg\hx0789-C3C4.dwg 10-19-12 11:04:48 AM Ben Antons

PROJECT NO: HX0789	DRAWN BY: BGA APPROVED BY: GMH DATE: 10/10/2012	NO.	REVISION DESCRIPTION	APPROVED	DATE

ALLTRANS, INC.
4403 1st Avenue S.E.
Cedar Rapids, Iowa 52402
Phone: (319) 393-8726

City of Holy Cross Subdivision No.3
Dubuque County, Iowa

Storm Water Pollution Prevention Plan

SHEET NO. C.05 OF C.06

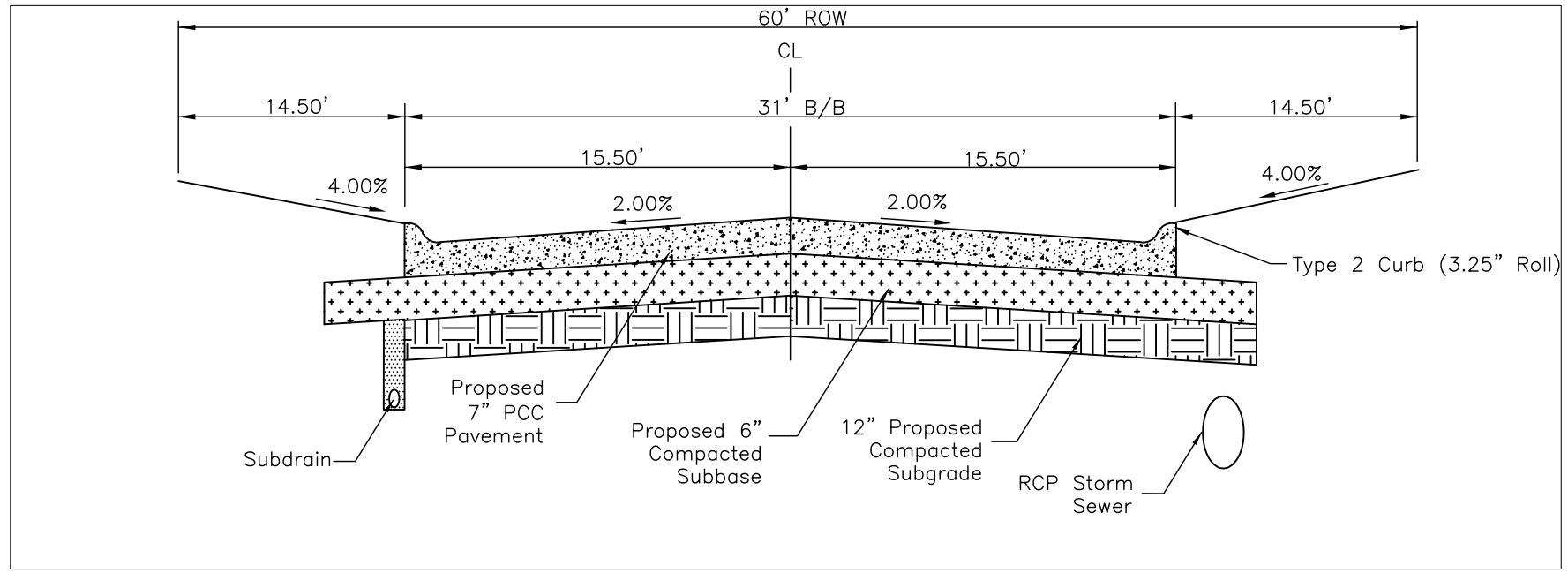

Typical Section

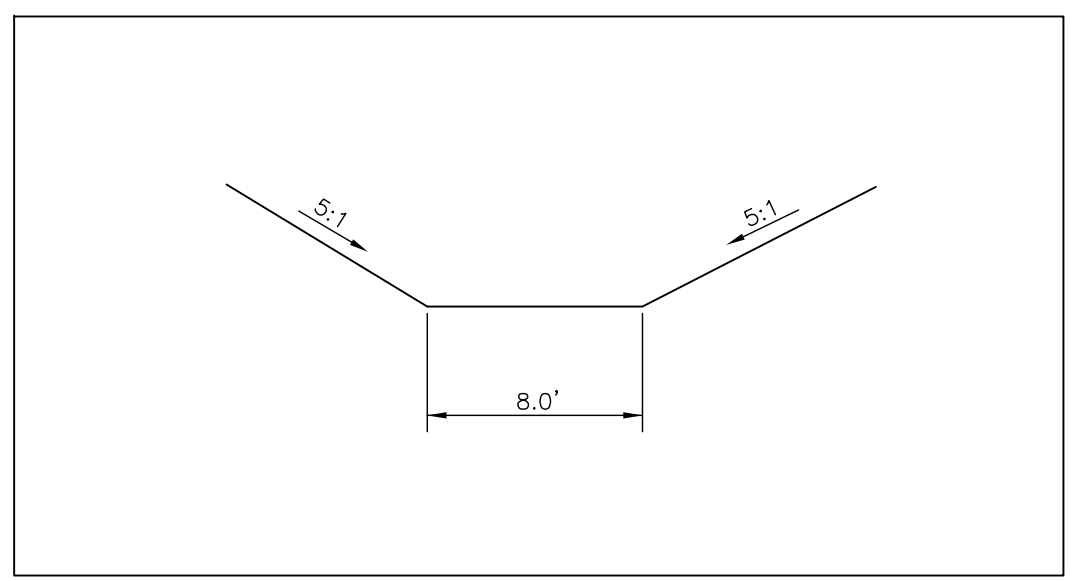

Typical Swale at The East Lotlines

F:\ACAD\HX0789\dwg\hx0789-C5.dwg 10-19-12 11:01:12 AM Ben Antons

PROJECT NO: HX0789	DRAWN BY: BGA APPROVED BY: GMH DATE: 10/10/2012	NO.	REVISION DESCRIPTION	APPROVED	DATE	ALLTRANS, INC. 4403 1st Avenue S.E. Cedar Rapids, Iowa 52402 Phone: (319) 393-8726	City of Holy Cross Subdivision No.3 Dubuque County, Iowa	Typical Section	SHEET NO. C.06 OF C.06

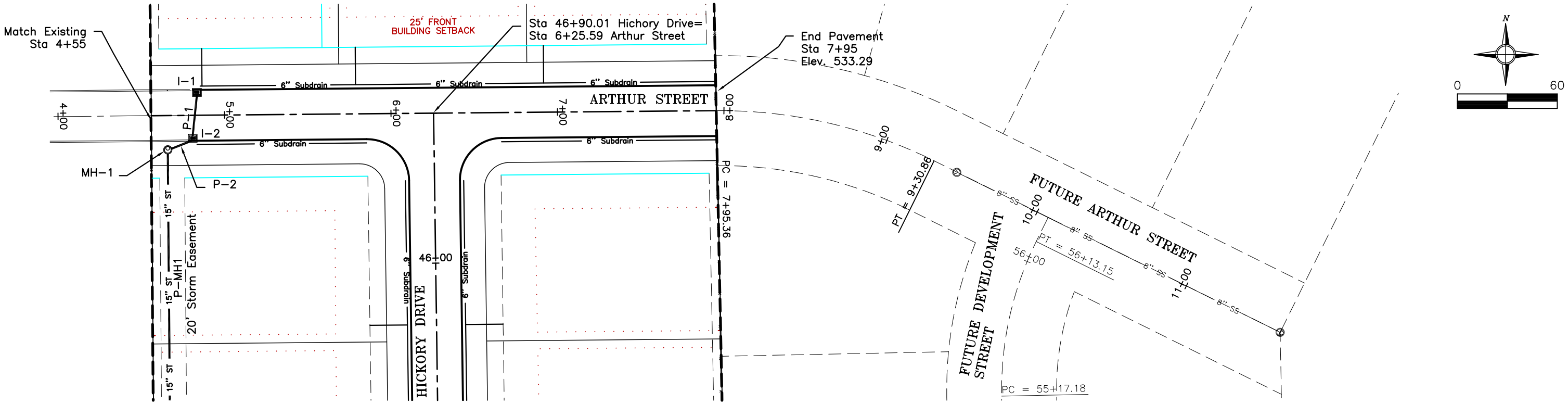

Utility Locations Shown On Each Plan Sheet Are Taken From Available Public Records. It Is The Duty Of The Contractor To Determine The Exact Location Of All Existing Utilities Affected By The Project, And Inform Utility Companies Before Constructing In Their Vicinity.

HIGH POINT ELEV = 533.40
HIGH POINT STA = 8+15.59
PVI STA = 8+50
PVI ELEV = 535.75
A.D. = -10.67
K = 18.74

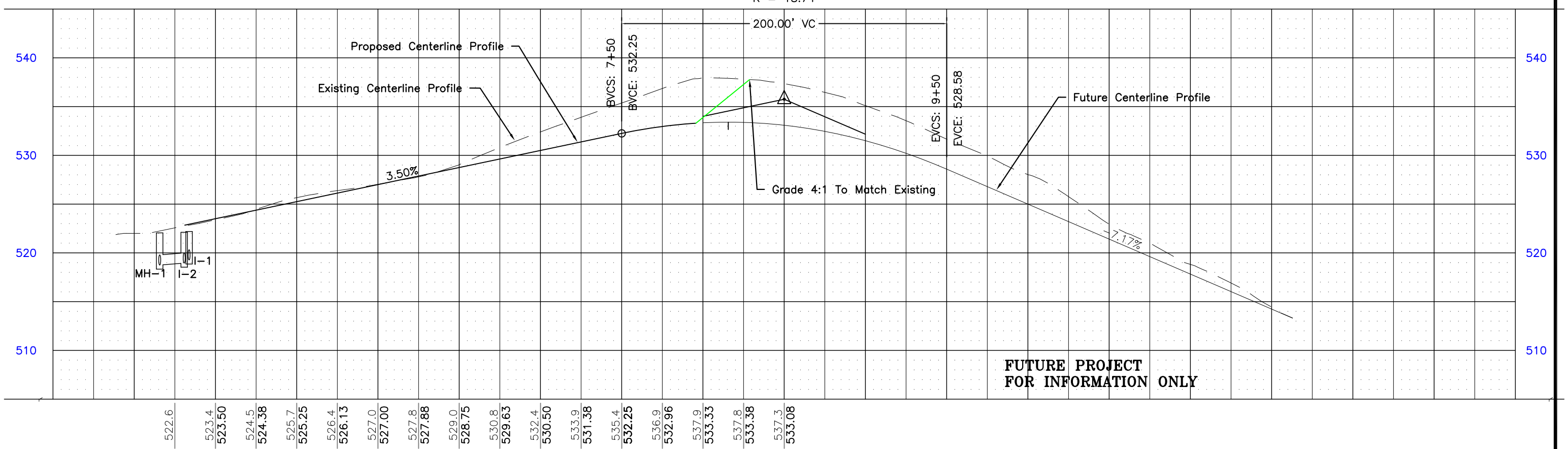

PROJECT NO: HX0789	DRAWN BY: BGA APPROVED BY: GMH DATE: 10/10/2012	NO. REVISION DESCRIPTION APPROVED DATE	ALLTRANS, INC. 4403 1st Avenue S.E. Cedar Rapids, Iowa 52402 Phone: (319) 393-8726	City of Holy Cross Subdivision No.2 Dubuque County, Iowa	Storm Sewer - Plan & Profile Arthur Street-Plan & Profile	SHEET NO. D.01 OF D.05

F:\ACAD\HX0789\dwg\hx0789-Storm.dwg 11-08-12 02:12:29 PM Ben Antons

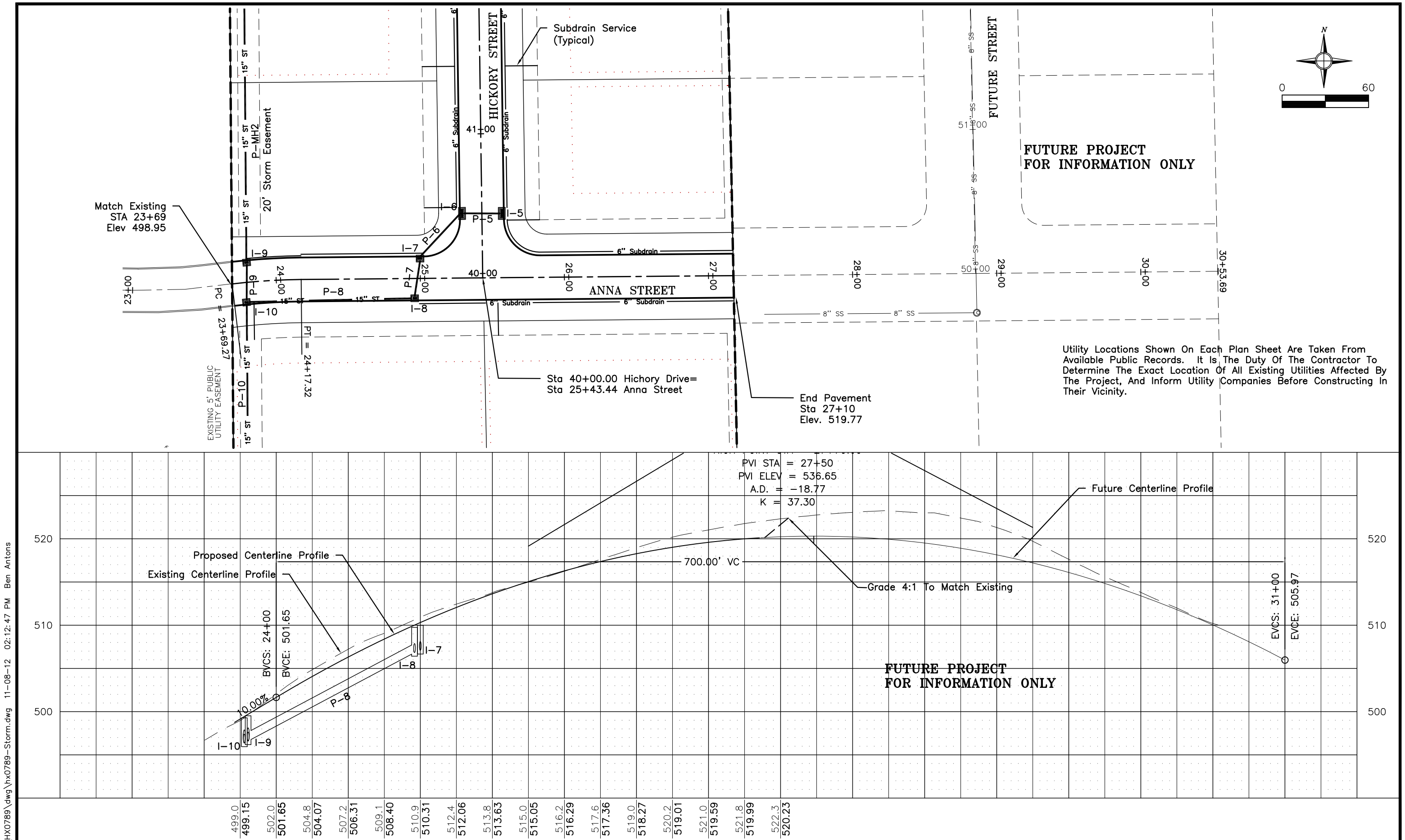

F:\ACAD\HX0789\dwg\hx0789-Storm.dwg 11-08-12 02:12:47 PM Ben Antons

PROJECT NO: HX0789	DRAWN BY: BGA APPROVED BY: GMH DATE: 10/10/2012	NO. REVISION DESCRIPTION APPROVED DATE	ALLTRANS, INC. 4403 1st Avenue S.E. Cedar Rapids, Iowa 52402 Phone: (319) 393-8726

City of Holy Cross Subdivision No.2
Dubuque County, Iowa

Storm Sewer - Plan & Profile
Anna Street-Plan & Profile

SHEET NO. D.02 OF D.05

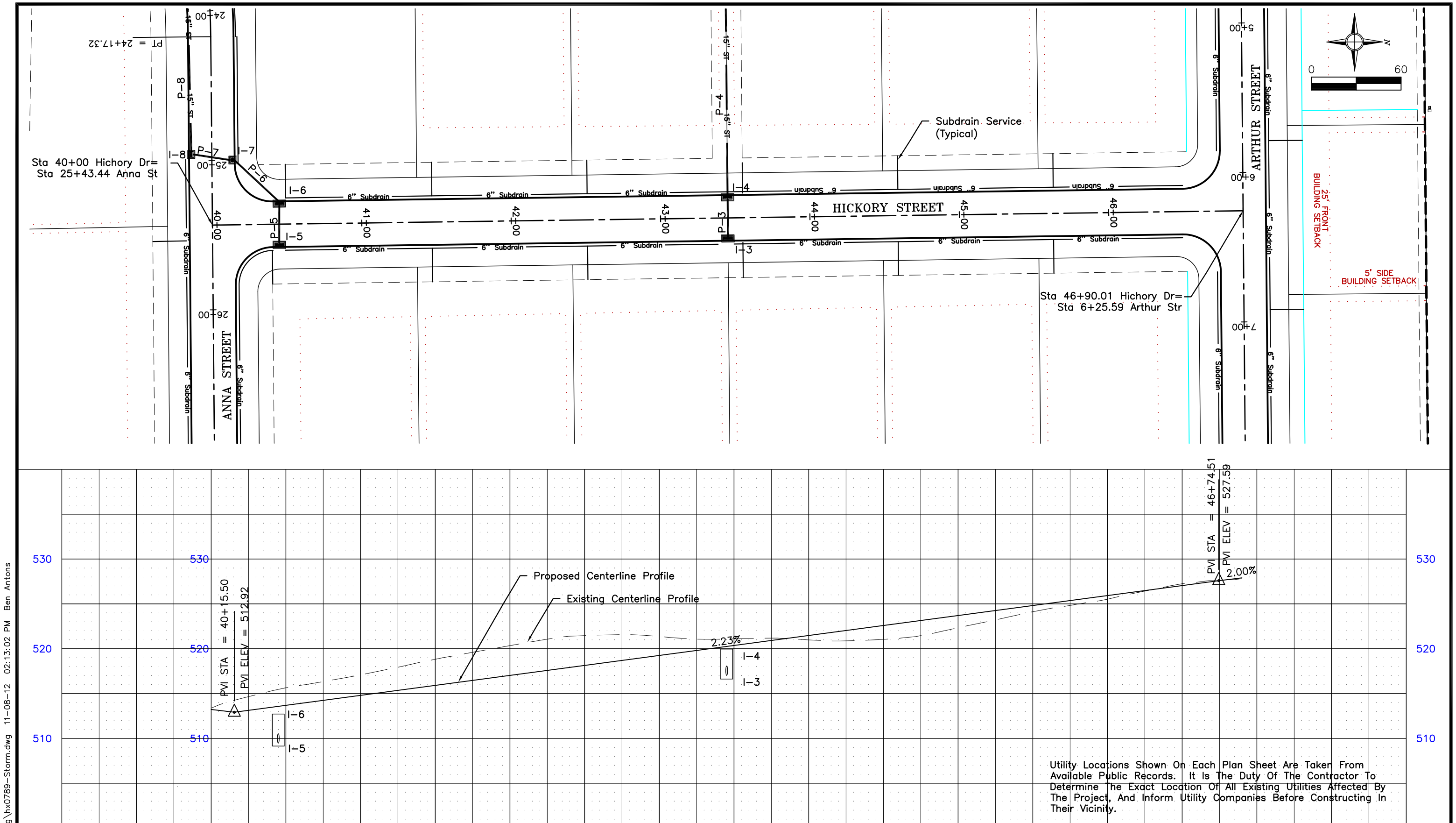

F:\ACAD\HX0789\dwg\hx0789-Storm.dwg 11-08-12 02:13:02 PM Ben Antons

PROJECT NO: HX0789	DRAWN BY: BGA APPROVED BY: GMH DATE: 10/10/2012	NO. REVISION DESCRIPTION APPROVED DATE	ALLTRANS, INC. 4403 1st Avenue S.E. Cedar Rapids, Iowa 52402 Phone: (319) 393-8726

City of Holy Cross Subdivision No.2
Dubuque County, Iowa

Storm Sewer - Plan & Profile
Hickory Street-Plan & Profile

SHEET NO. D.03 OF D.05

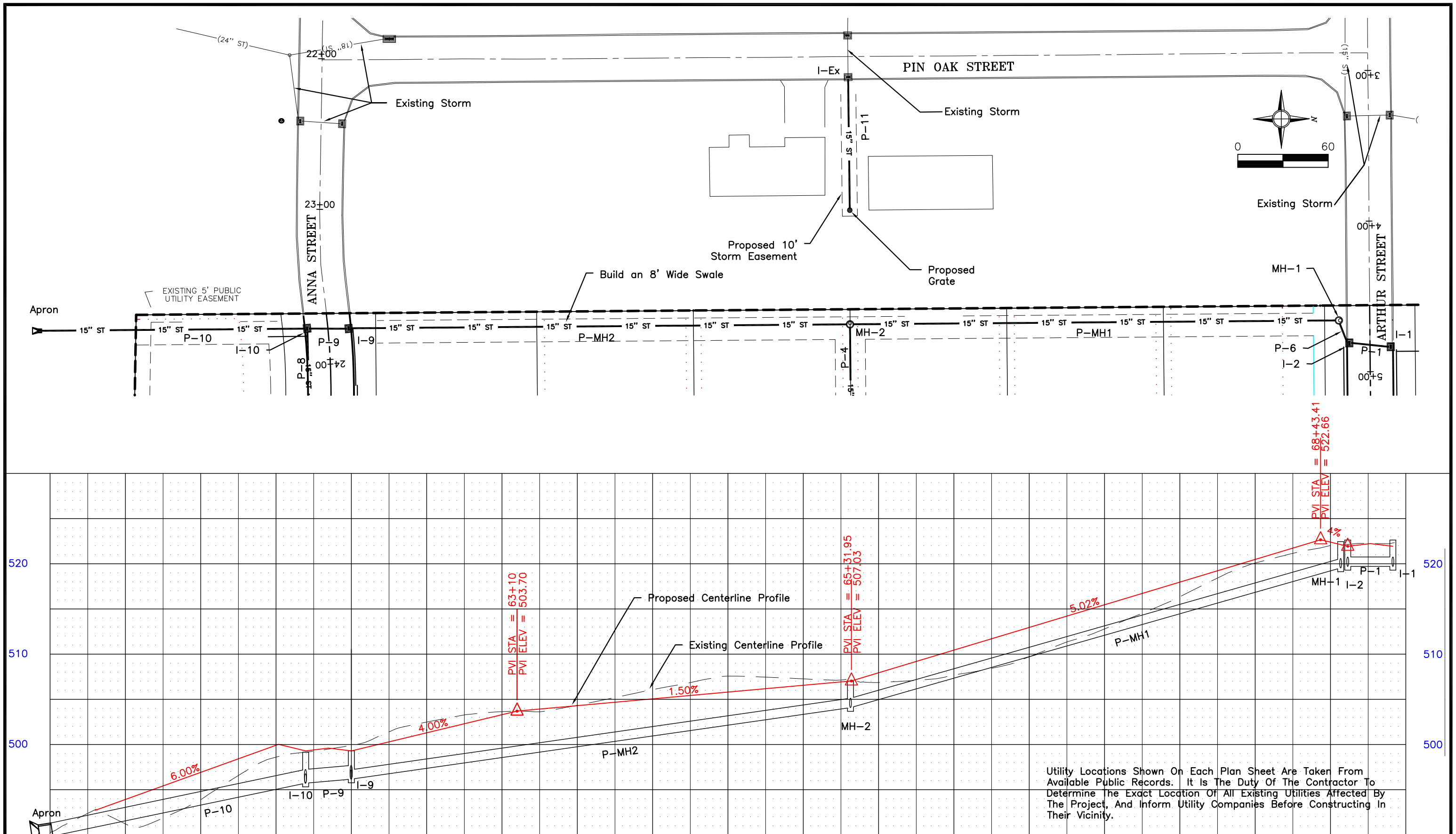

Utility Locations Shown On Each Plan Sheet Are Taken From Available Public Records. It Is The Duty Of The Contractor To Determine The Exact Location Of All Existing Utilities Affected By The Project, And Inform Utility Companies Before Constructing In Their Vicinity.

F:\ACAD\HX0789\dwg\hx0789-Storm.dwg 11-08-12 02:13:17 PM Ben Antons

PROJECT NO: HX0789	DRAWN BY: BGA APPROVED BY: GMH DATE: 10/10/2012	NO. REVISION DESCRIPTION APPROVED DATE	ALLTRANS, INC. 4403 1st Avenue S.E. Cedar Rapids, Iowa 52402 Phone: (319) 393-8726

City of Holy Cross Subdivision No.2
Dubuque County, Iowa

Storm Sewer - Plan & Profile
North-South-Plan & Profile

SHEET NO. D.04 OF D.05

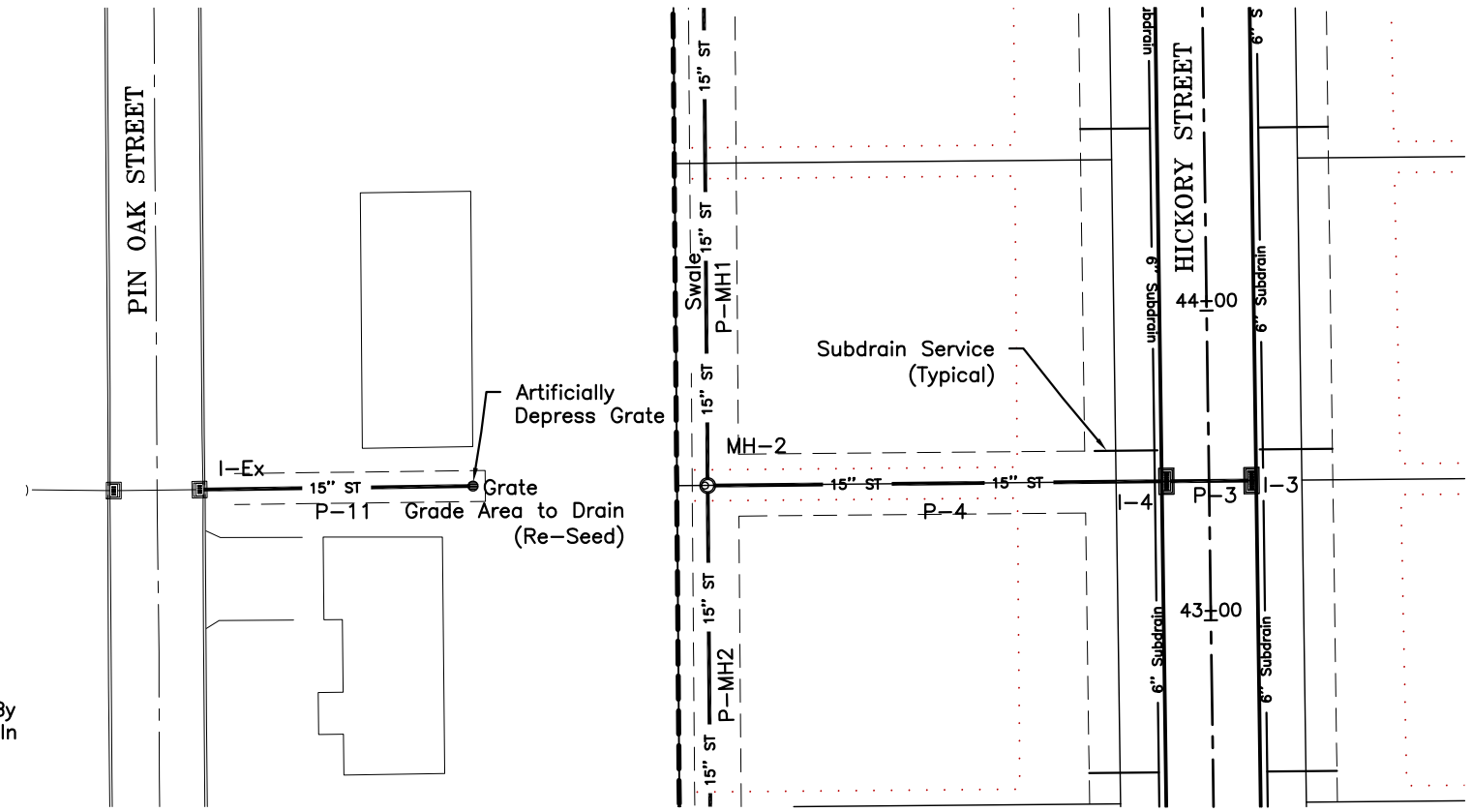

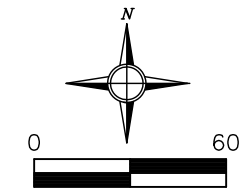

Utility Locations Shown On Each Plan Sheet Are Taken From Available Public Records. It Is The Duty Of The Contractor To Determine The Exact Location Of All Existing Utilities Affected By The Project, And Inform Utility Companies Before Constructing In Their Vicinity.

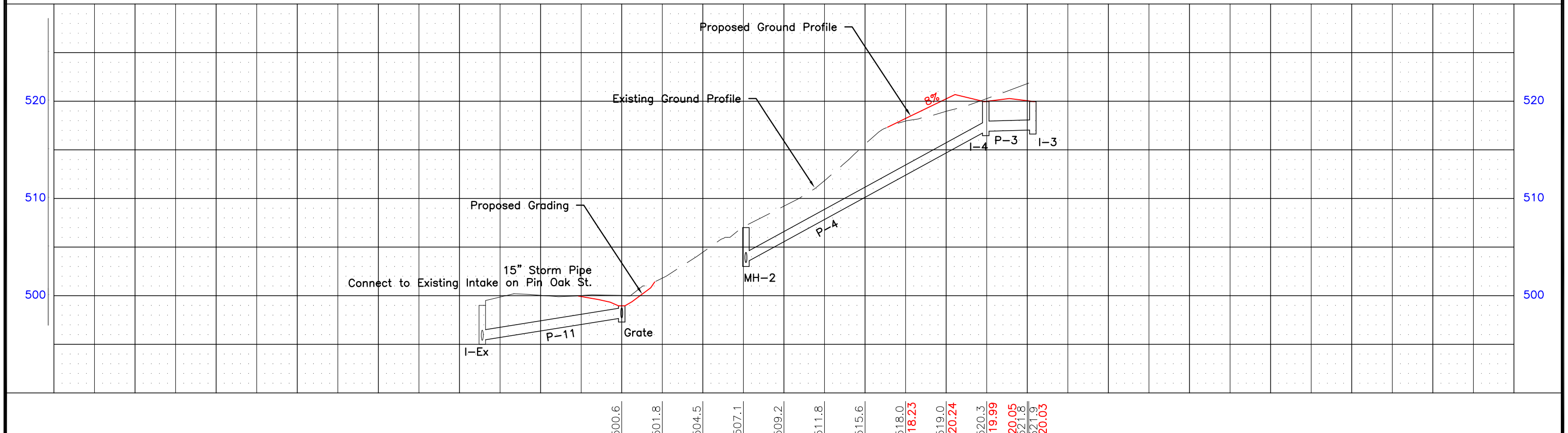

F:\ACAD\HX0789\dwg\hx0789-Storm.dwg 11-08-12 02:13:35 PM Ben Antons

PROJECT NO: HX0789	DRAWN BY: BGA APPROVED BY: GMH DATE: 10/10/2012	NO. REVISION DESCRIPTION APPROVED DATE	ALLTRANS, INC. 4403 1st Avenue S.E. Cedar Rapids, Iowa 52402 Phone: (319) 393-8726	City of Holy Cross Subdivision No.2 Dubuque County, Iowa	Storm Sewer - Plan & Profile East-West-Plan & Profile

SHEET NO. D.05 OF D.05

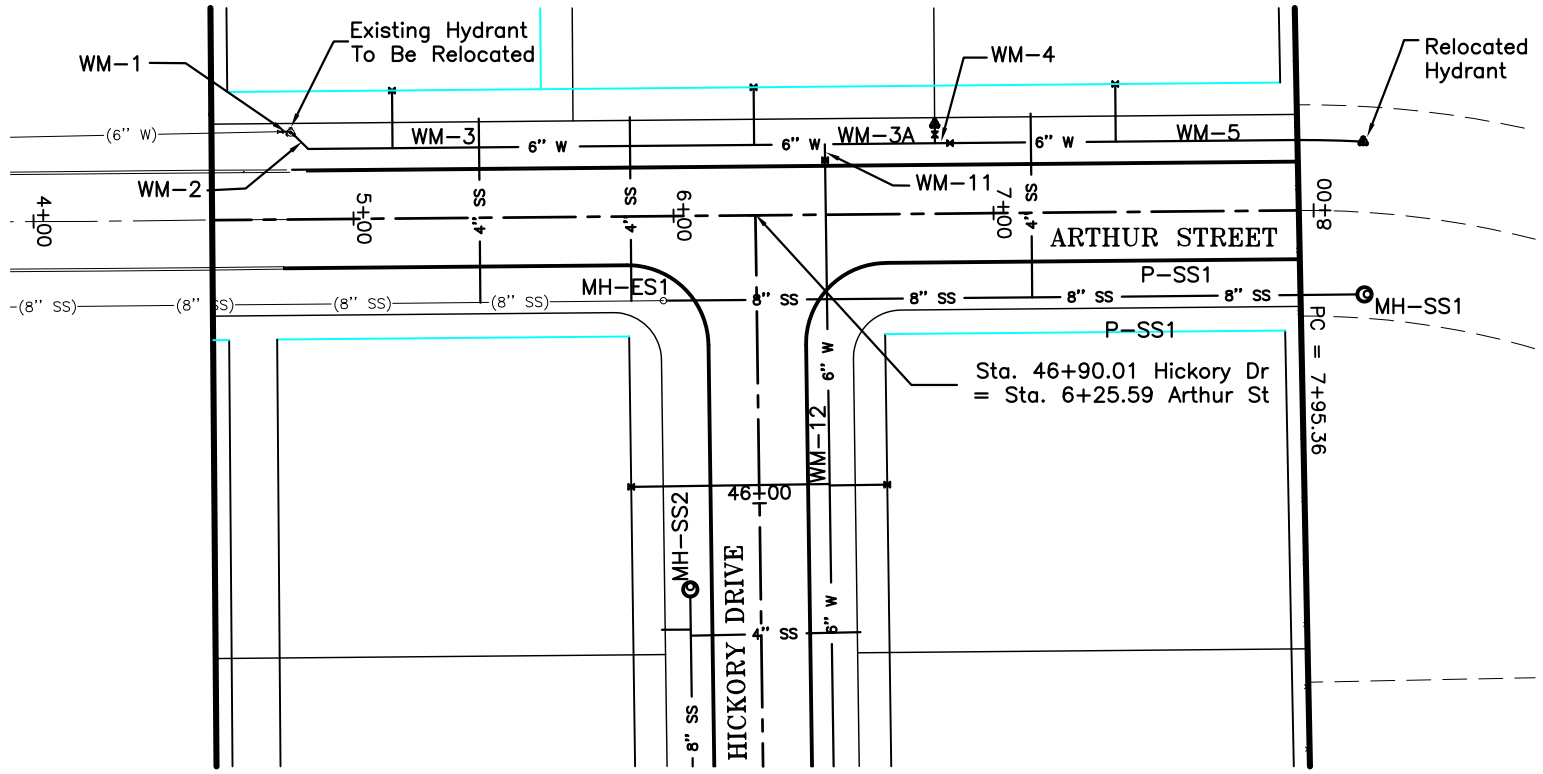

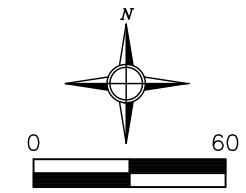

HIGH POINT ELEV = 533.40
HIGH POINT STA = 8+15.59
PVI STA = 8+50
PVI ELEV = 535.75
A.D. = −10.67
K = 18.74

Utility Locations Shown On Each Plan Sheet Are Taken From Available Public Records. It Is The Duty Of The Contractor To Determine The Exact Location Of All Existing Utilities Affected By The Project, And Inform Utility Companies Before Constructing In Their Vicinity.

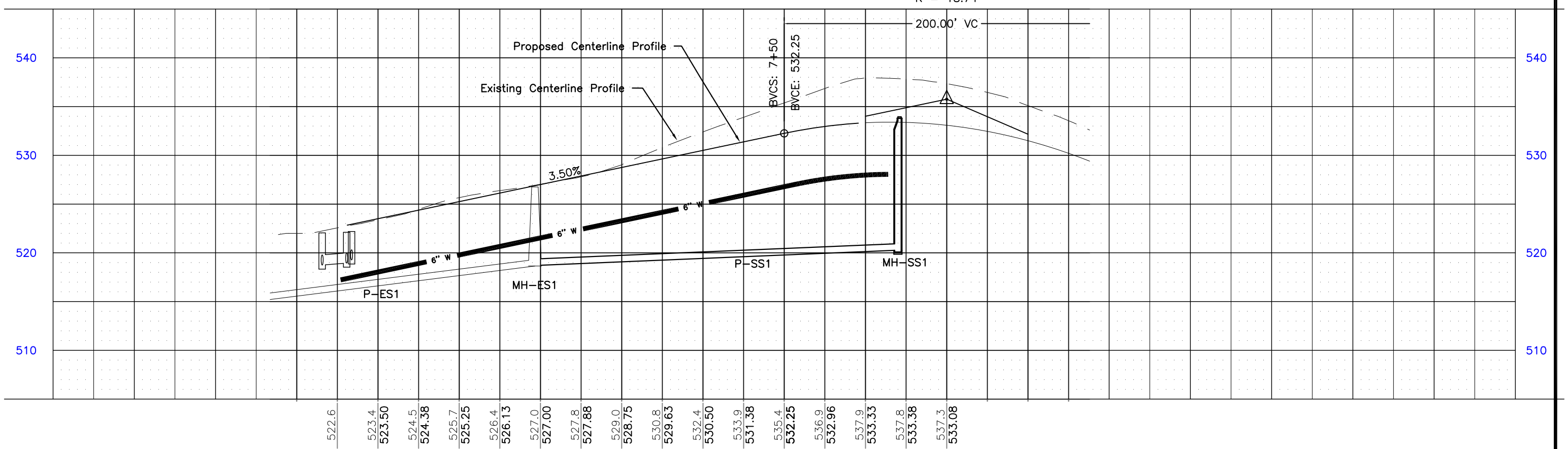

PROJECT NO: HX0789	DRAWN BY: BGA APPROVED BY: GMH DATE: 10/10/2012	NO. REVISION DESCRIPTION APPROVED DATE	ALLTRANS, INC. 4403 1st Avenue S.E. Cedar Rapids, Iowa 52402 Phone: (319) 393-8726	City of Holy Cross Subdivision No.2 Dubuque County, Iowa	Sanitary Sewer - Plan & Profile Arthur Street-Plan & Profile	SHEET NO. E.01 OF E.03

F:\ACAD\HX0789\dwg\hx0789-Sani.dwg 11-08-12 02:14:02 PM Ben Antons

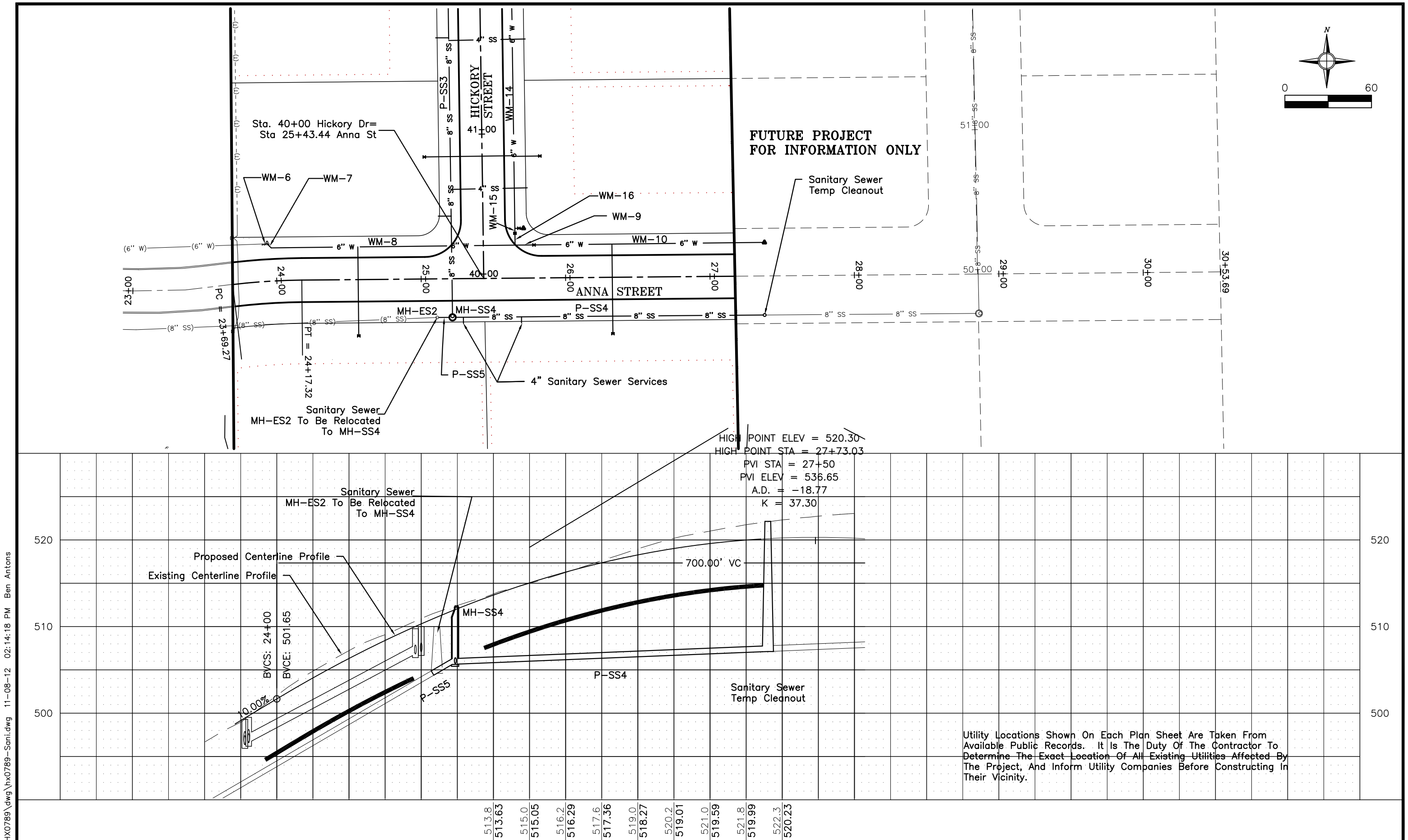

F:\ACAD\HX0789\dwg\hx0789-Sani.dwg 11-08-12 02:14:18 PM Ben Antons

PROJECT NO: HX0789	DRAWN BY: BGA APPROVED BY: GMH DATE: 10/10/2012	NO. / REVISION DESCRIPTION / APPROVED / DATE	ALLTRANS, INC. 4403 1st Avenue S.E. Cedar Rapids, Iowa 52402 Phone: (319) 393-8726	City of Holy Cross Subdivision No.2 Dubuque County, Iowa	Sanitary Sewer - Plan & Profile Anna Street-Plan & Profile

SHEET NO. E.02 OF E.03

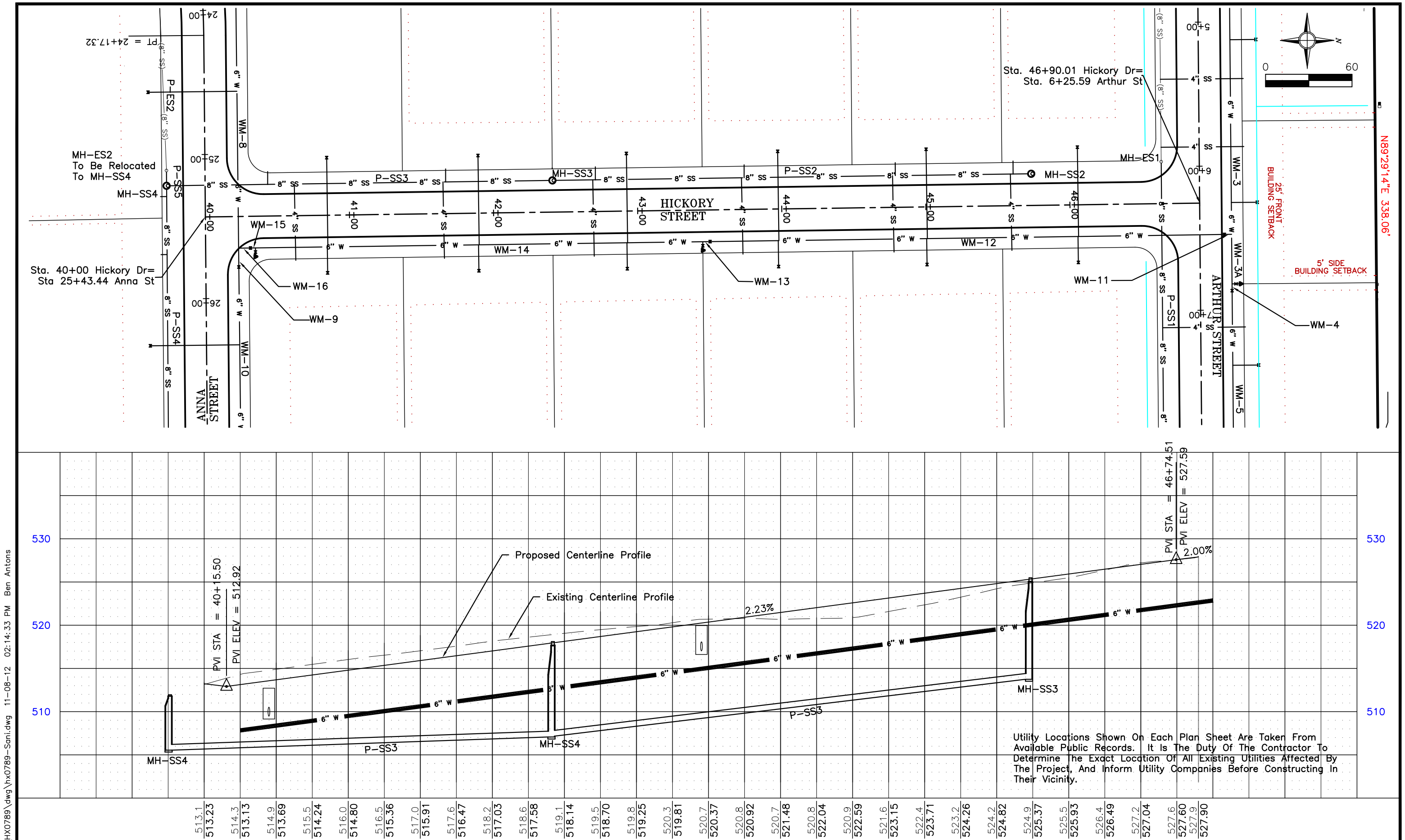

F:\ACAD\HX0789\dwg\hx0789-Sani.dwg 11-08-12 02:14:33 PM Ben Antons

PROJECT NO: HX0789	DRAWN BY: BGA APPROVED BY: GMH DATE: 10/10/2012	NO. REVISION DESCRIPTION APPROVED DATE	ALLTRANS, INC. 4403 1st Avenue S.E. Cedar Rapids, Iowa 52402 Phone: (319) 393-8726	City of Holy Cross Subdivision No.2 Dubuque County, Iowa	Sanitary Sewer - Plan & Profile Hickory Street-Plan & Profile	SHEET NO. E.03 OF E.03

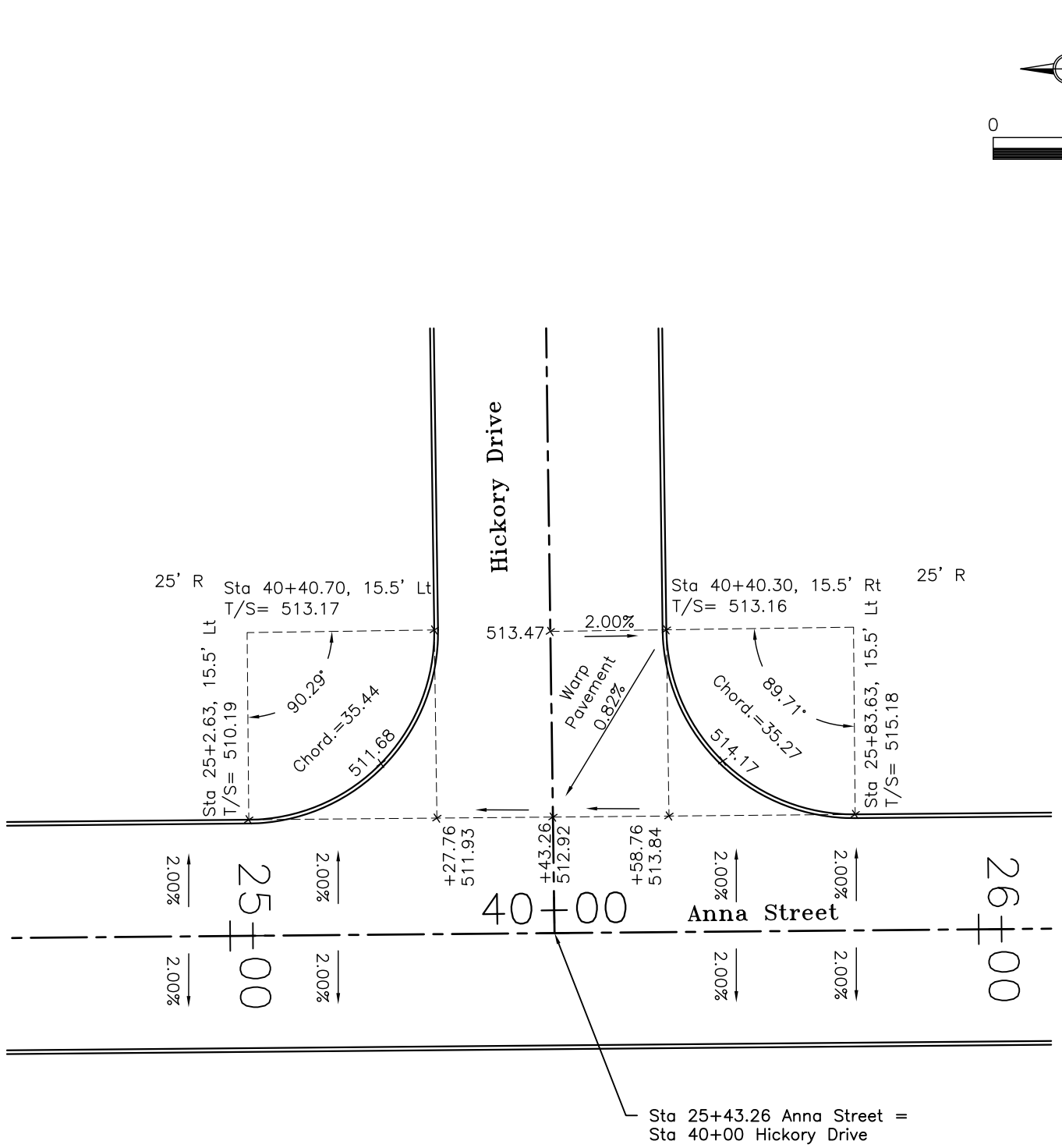

All Elevations Are Top of Slab.

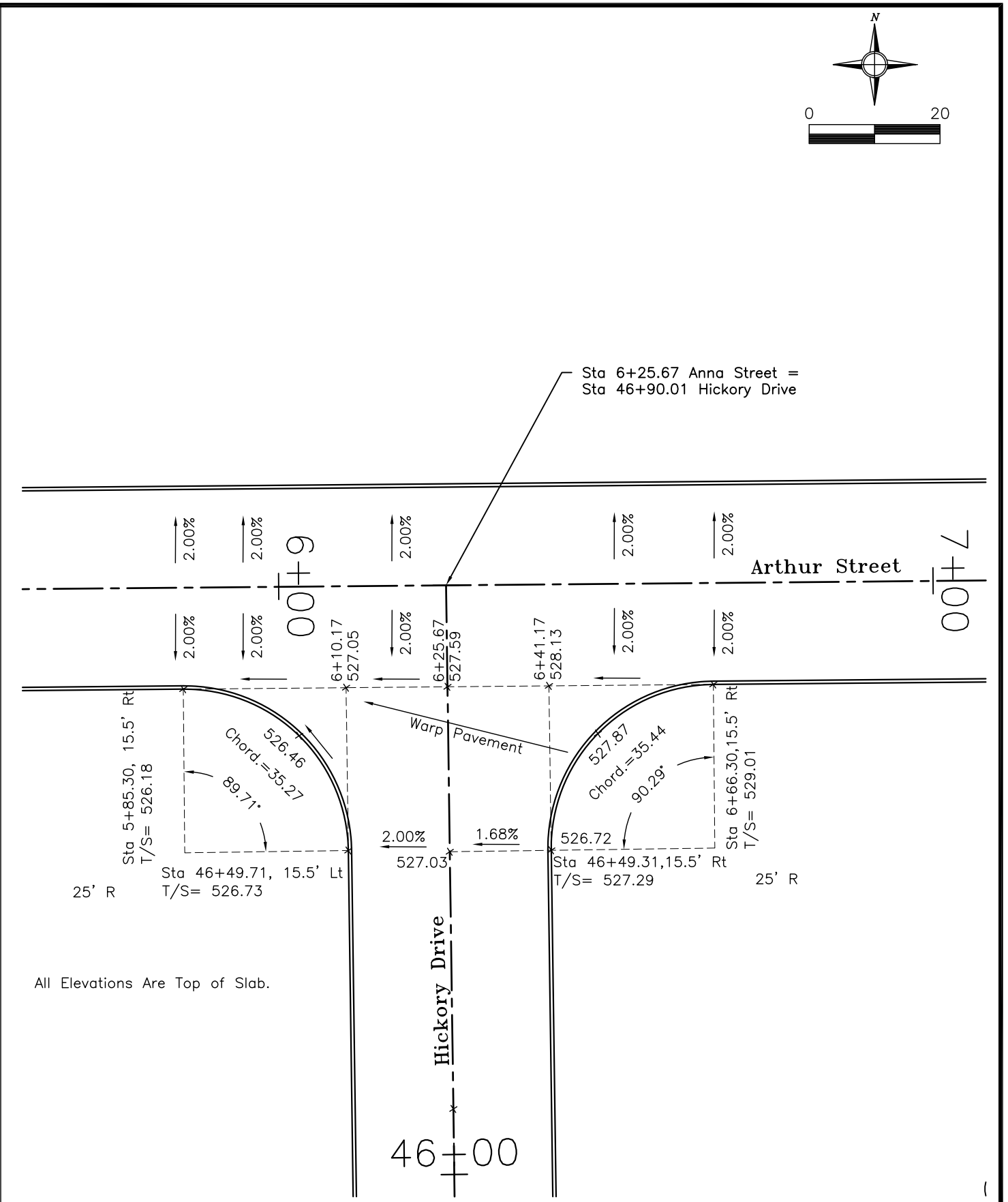

All Elevations Are Top of Slab.

F:\ACAD\HX0789\dwg\HX0789-F1.dwg 11-08-12 02:15:02 PM Ben Antons

PROJECT NO: HX0789	DRAWN BY: BGA APPROVED BY: GMH DATE: 10/10/2012	NO.	REVISION DESCRIPTION	APPROVED	DATE

ALLTRANS, INC.
4403 1st Avenue S.E.
Cedar Rapids, Iowa 52402
Phone: (319) 393-8726

City of Holy Cross Subdivision No.2
Dubuque County, Iowa

Intersection Geometrics

SHEET NO. F.01 OF F.01

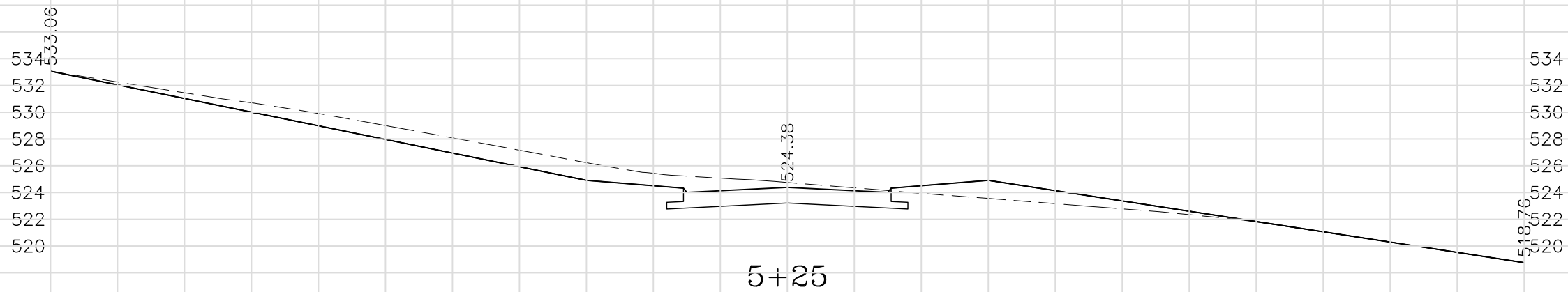

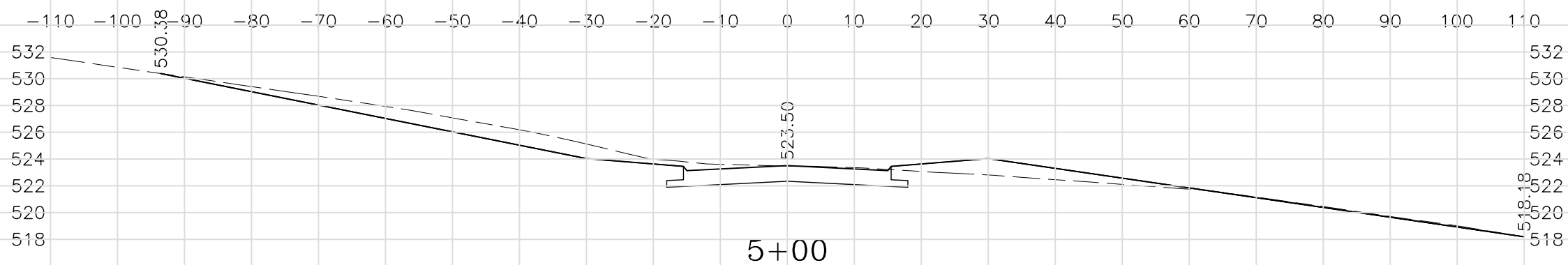

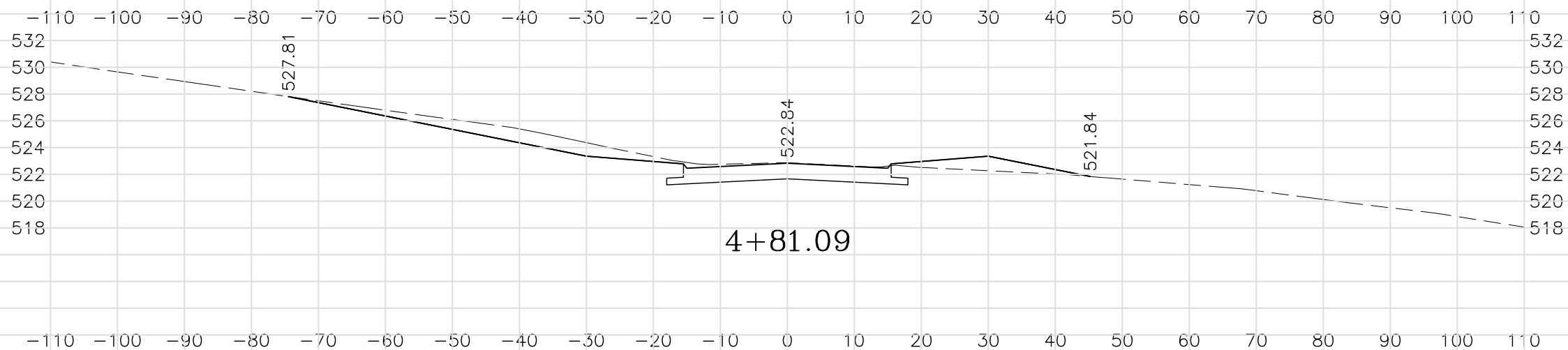

PROJECT NO: HX0789	DRAWN BY: BGA APPROVED BY: GMH DATE: 10/17/2012	NO.	REVISION DESCRIPTION	APPROVED	DATE	ALLTRANS, INC. 1930 St Andrews Ct NE Cedar Rapids, Iowa 52402 Phone: (319) 393-8726	Holy Cross Subdivision No. 3	Arthur Street Cross Sections	SHEET NO. X.01 OF X.04

F:\ACAD\HX0789\dwg\HX0789-Sections.dwg 10-18-12 10:56:17 AM Ben Antons

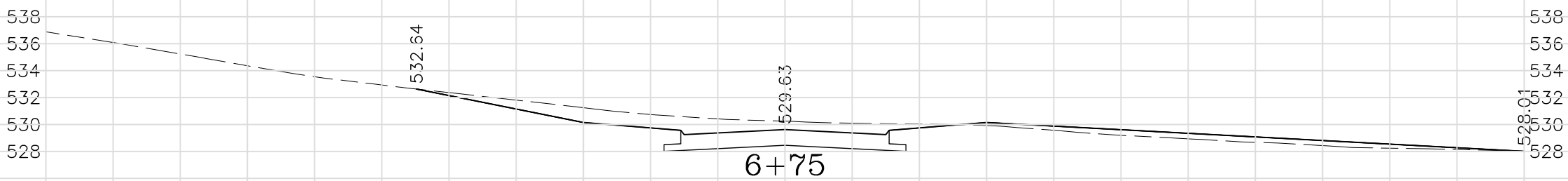

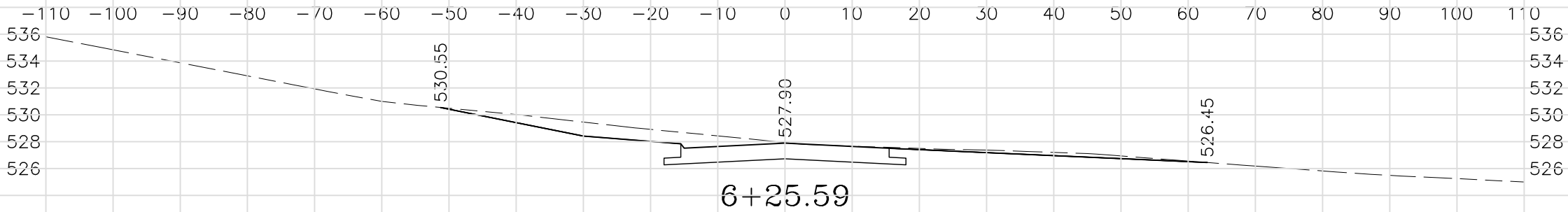

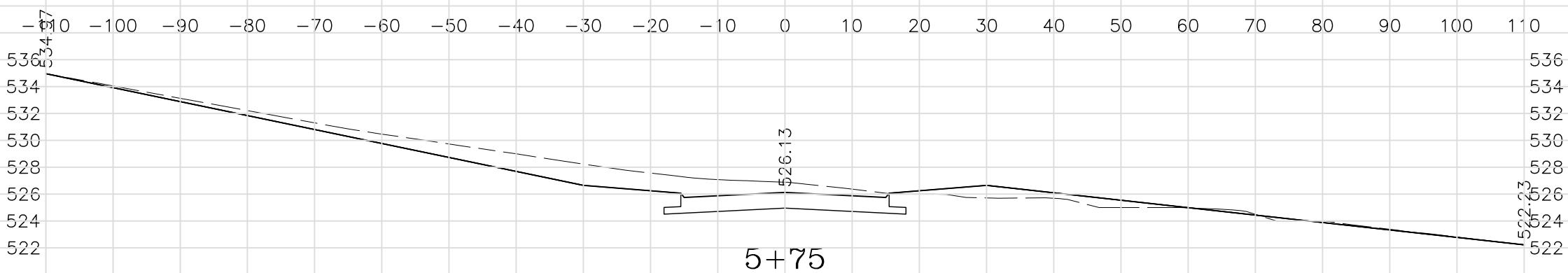

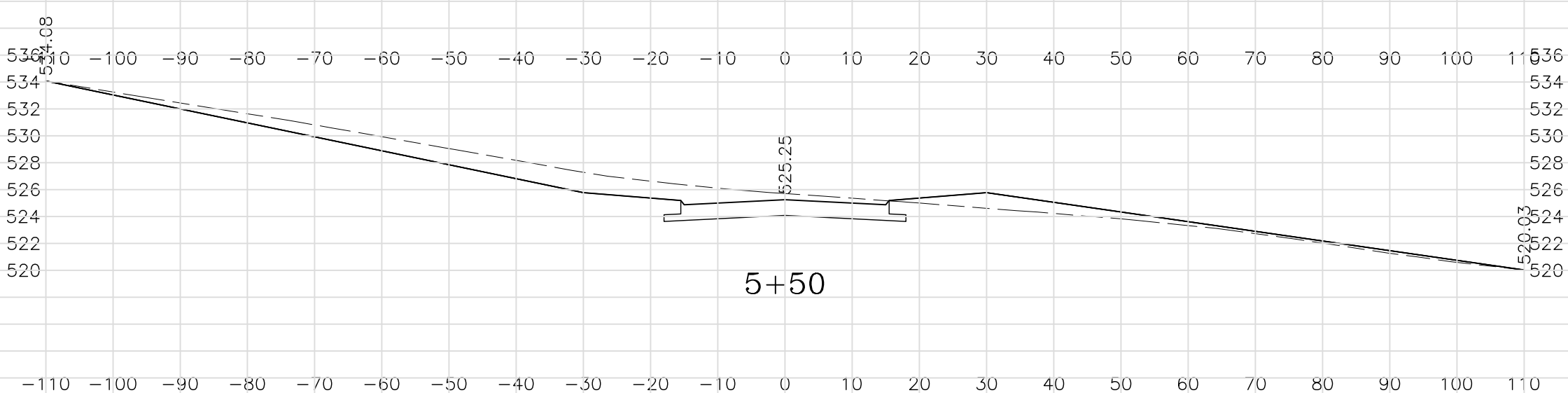

PROJECT NO: HX0789	DRAWN BY: BGA APPROVED BY: GMH DATE: 10/17/2012	NO.	REVISION DESCRIPTION	APPROVED	DATE	ALLTRANS, INC. 1930 St Andrews Ct NE Cedar Rapids, Iowa 52402 Phone: (319) 393-8726	Holy Cross Subdivision No. 3	Arthur Street Cross Sections	SHEET NO. X.02 OF X.04

F:\ACAD\HX0789\dwg\HX0789-Sections.dwg 10-18-12 10:55:56 AM Ben Antons

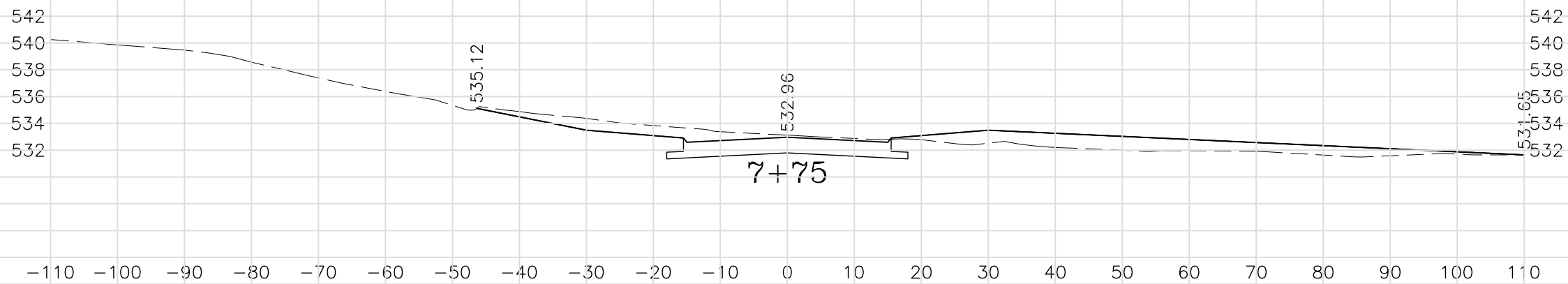

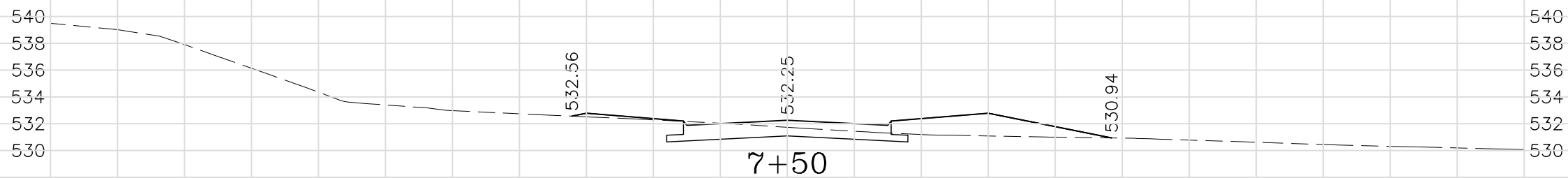

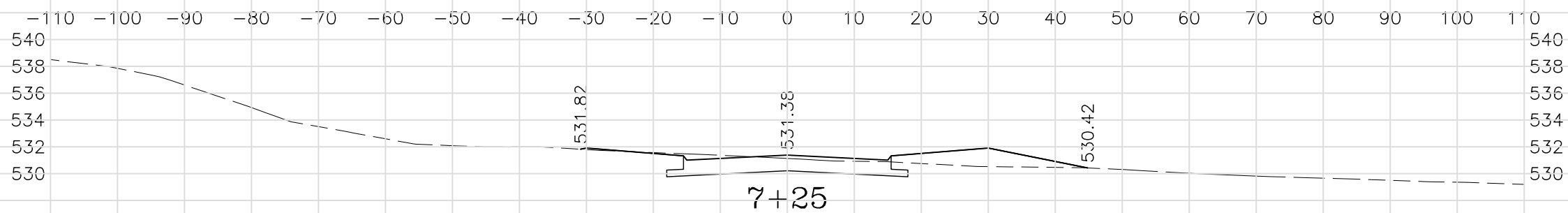

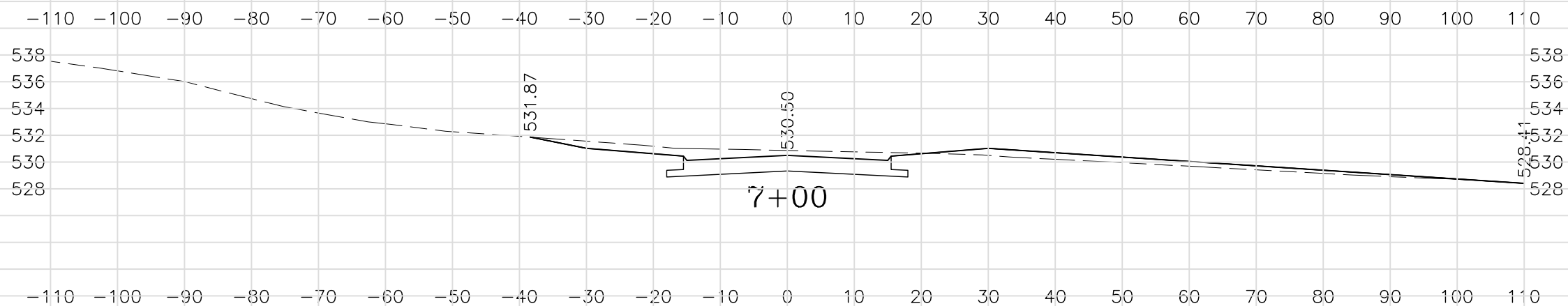

PROJECT NO: HX0789	DRAWN BY: BGA APPROVED BY: GMH DATE: 10/17/2012	NO.	REVISION DESCRIPTION	APPROVED	DATE

ALLTRANS, INC.
1930 St Andrews Ct NE
Cedar Rapids, Iowa 52402
Phone: (319) 393-8726

Holy Cross Subdivision No. 3

Arthur Street
Cross Sections

SHEET NO. X.03 OF X.04

F:\ACAD\HX0789\dwg\HX0789-Sections.dwg 10-18-12 10:56:50 AM Ben Antons

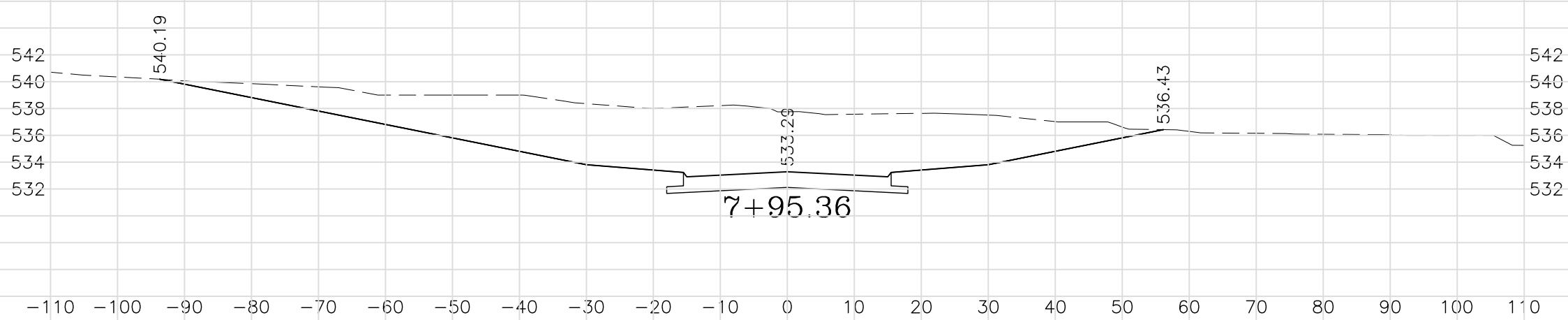

PROJECT NO: HX0789	DRAWN BY: BGA APPROVED BY: GMH DATE: 10/17/2012	NO. / REVISION DESCRIPTION / APPROVED / DATE	ALLTRANS, INC. 1930 St Andrews Ct NE Cedar Rapids, Iowa 52402 Phone: (319) 393-8726	Holy Cross Subdivision No. 3	Arthur Street Cross Sections	SHEET NO. X.04 OF X.04

F:\ACAD\HX0789\dwg\HX0789-Sections.dwg 10-18-12 10:57:04 AM Ben Antons

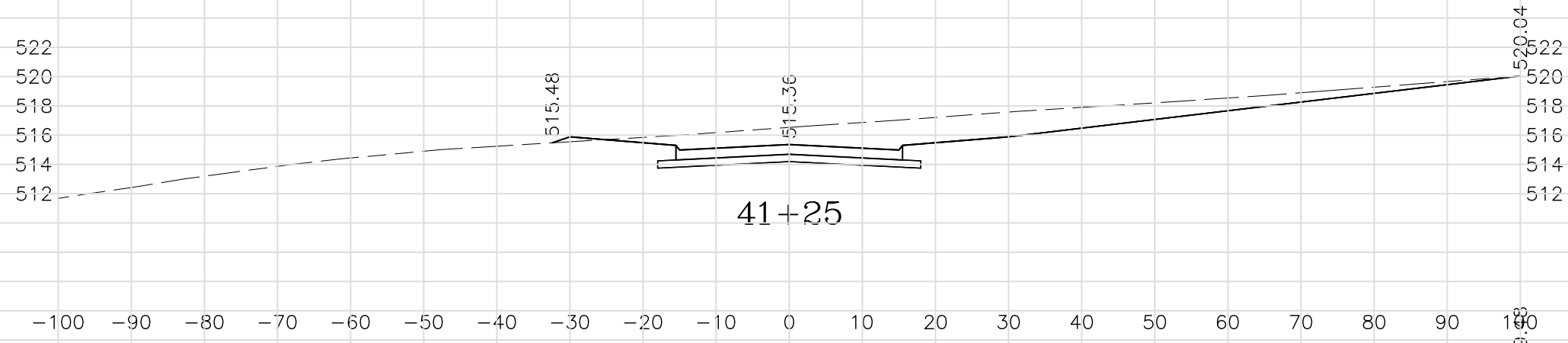

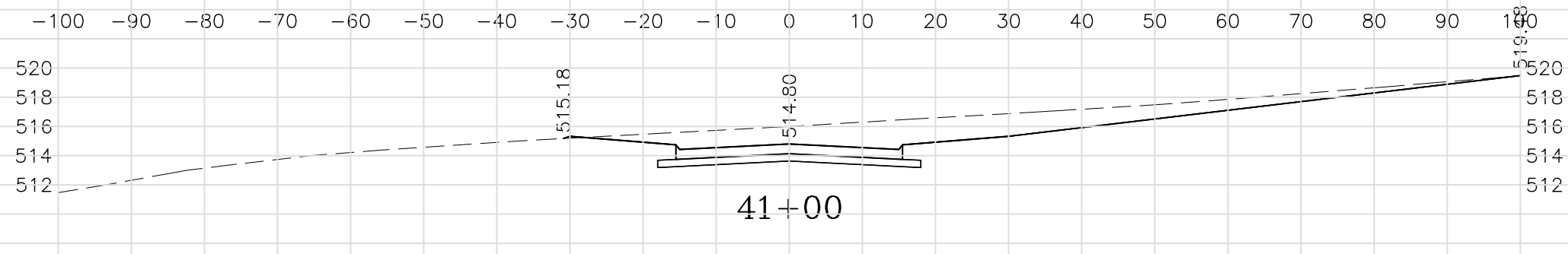

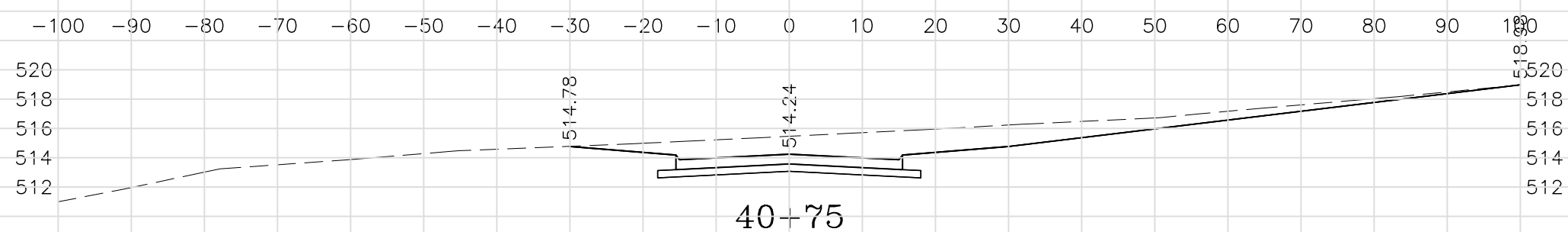

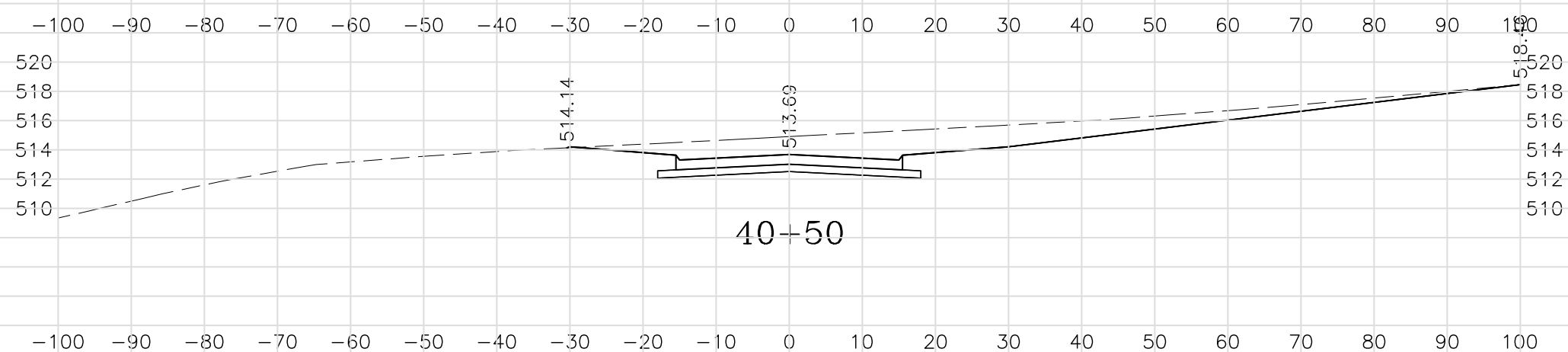

F:\ACAD\HX0789\dwg\HX0789-Sections.dwg 10-18-12 11:03:32 AM Ben Antons

PROJECT NO: HX0789	DRAWN BY: BGA APPROVED BY: GMH DATE: 10/17/2012	NO.	REVISION DESCRIPTION	APPROVED	DATE	ALLTRANS, INC. 1930 St Andrews Ct NE Cedar Rapids, Iowa 52402 Phone: (319) 393-8726	Holy Cross Subdivision No. 3	Hickory Drive Cross Sections	SHEET NO. Y.01 OF Y.07

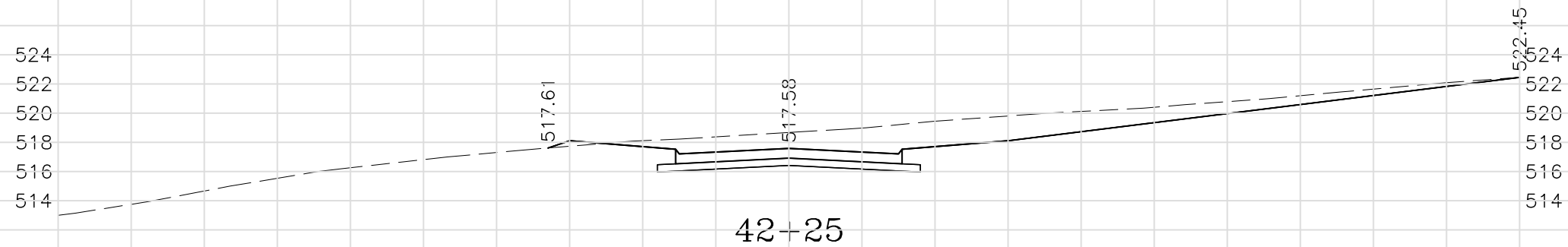

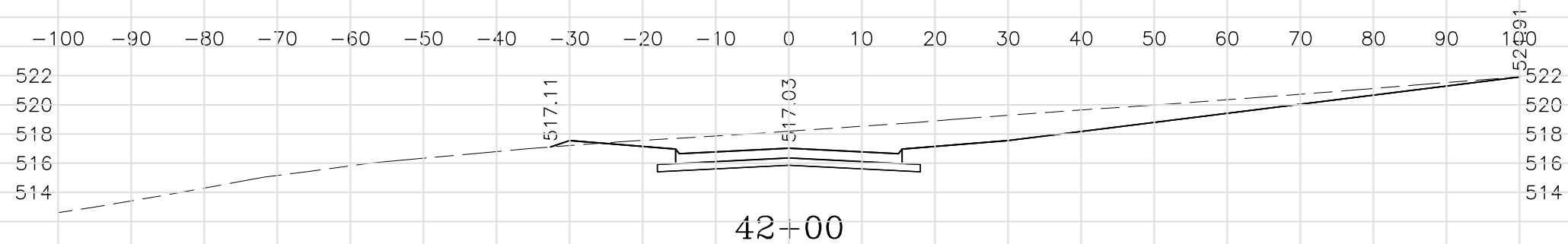

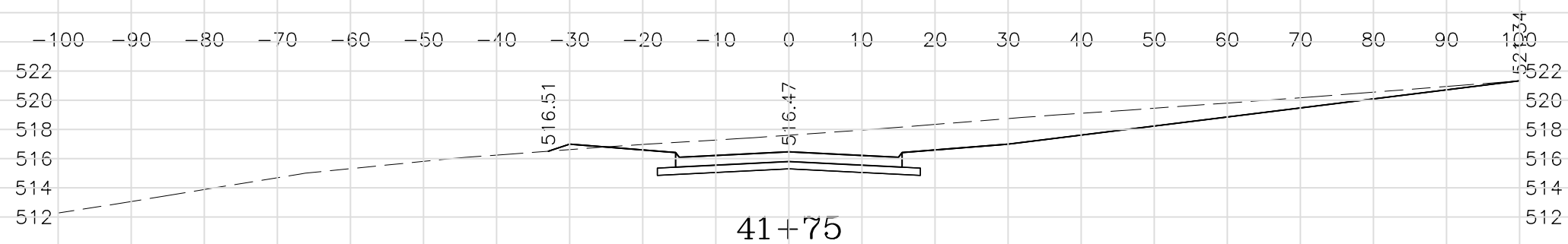

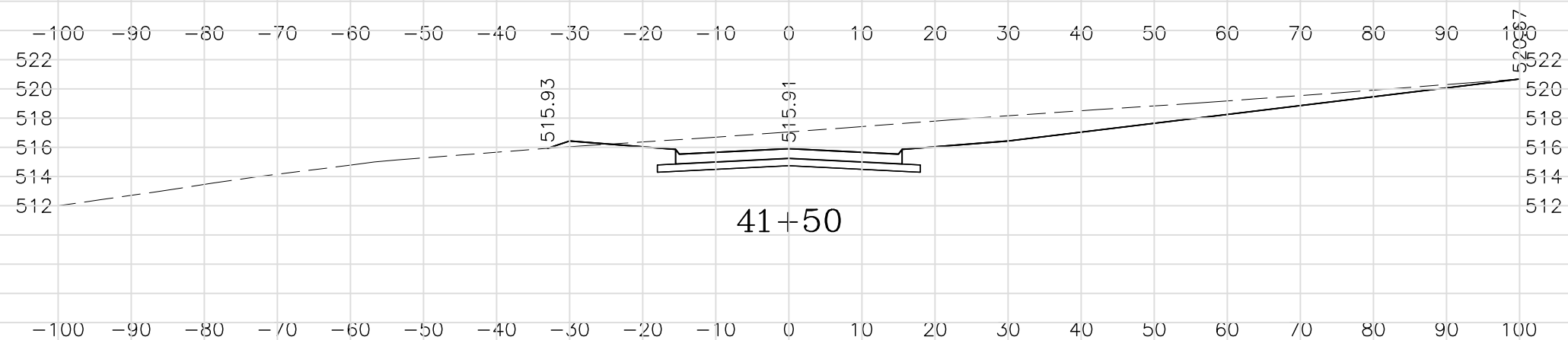

PROJECT NO: HX0789	DRAWN BY: BGA APPROVED BY: GMH DATE: 10/17/2012	NO.	REVISION DESCRIPTION	APPROVED	DATE	ALLTRANS, INC. 1930 St Andrews Ct NE Cedar Rapids, Iowa 52402 Phone: (319) 393-8726	Holy Cross Subdivision No. 3	Hickory Drive Cross Sections	SHEET NO. Y.02 OF Y.07

F:\ACAD\HX0789\dwg\HX0789-Sections.dwg 10-18-12 11:03:17 AM Ben Antons

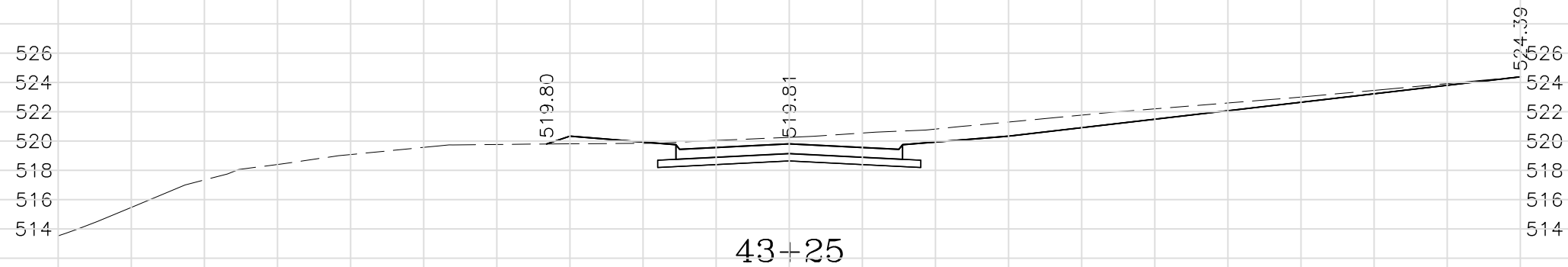

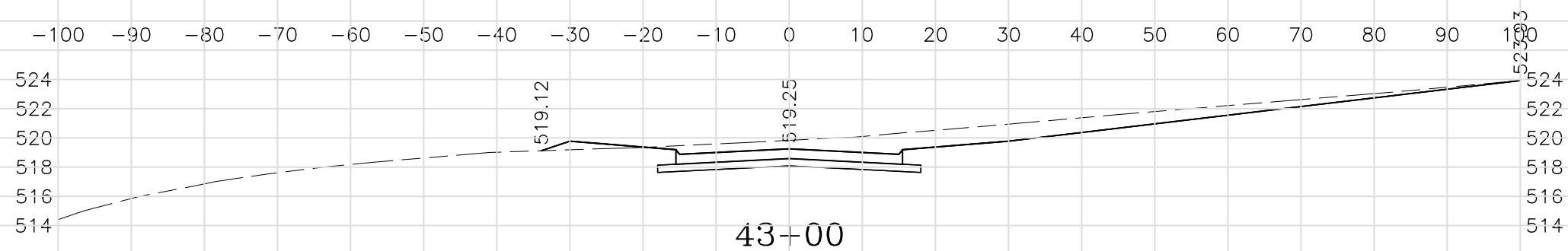

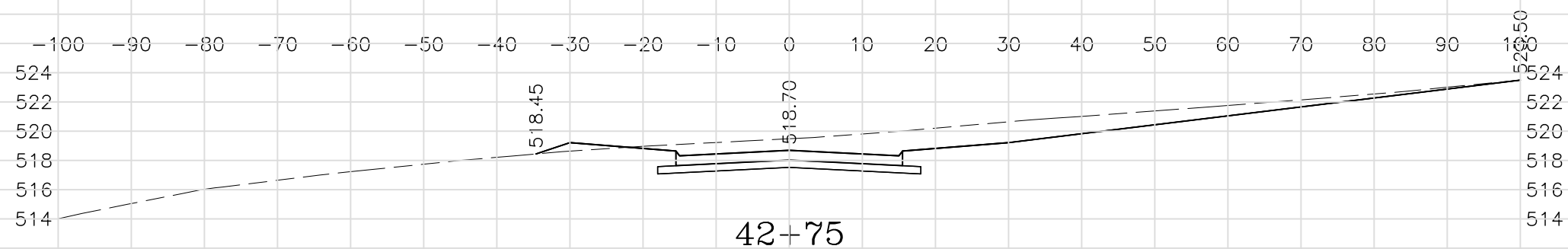

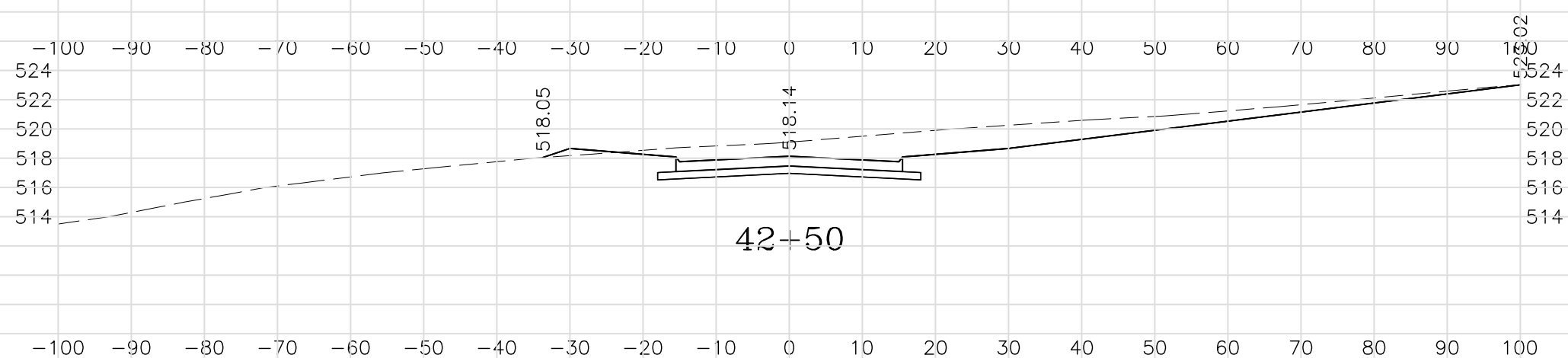

PROJECT NO: HX0789	DRAWN BY: BGA APPROVED BY: GMH DATE: 10/17/2012	NO.	REVISION DESCRIPTION	APPROVED	DATE	ALLTRANS, INC. 1930 St Andrews Ct NE Cedar Rapids, Iowa 52402 Phone: (319) 393-8726	Holy Cross Subdivision No. 3	Hickory Drive Cross Sections	SHEET NO. Y.03 OF Y.07

F:\ACAD\HX0789\dwg\HX0789-Sections.dwg 10-18-12 11:03:01 AM Ben Antons

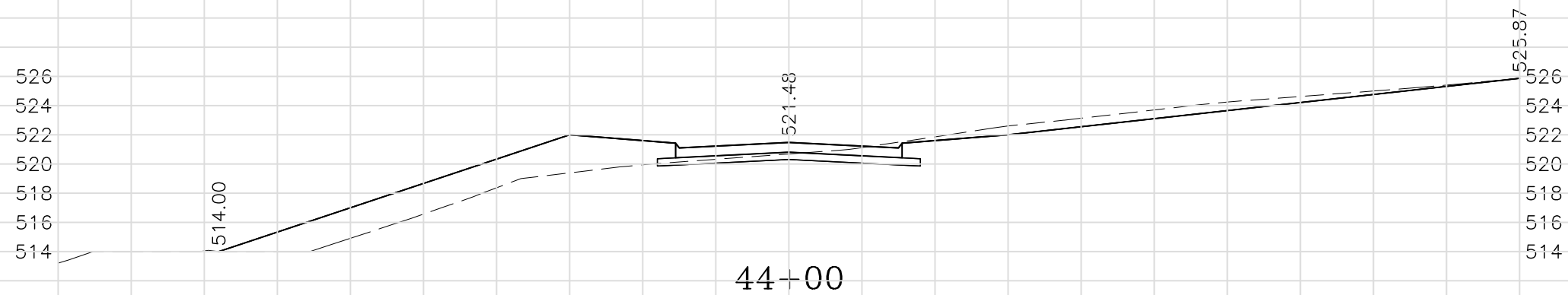

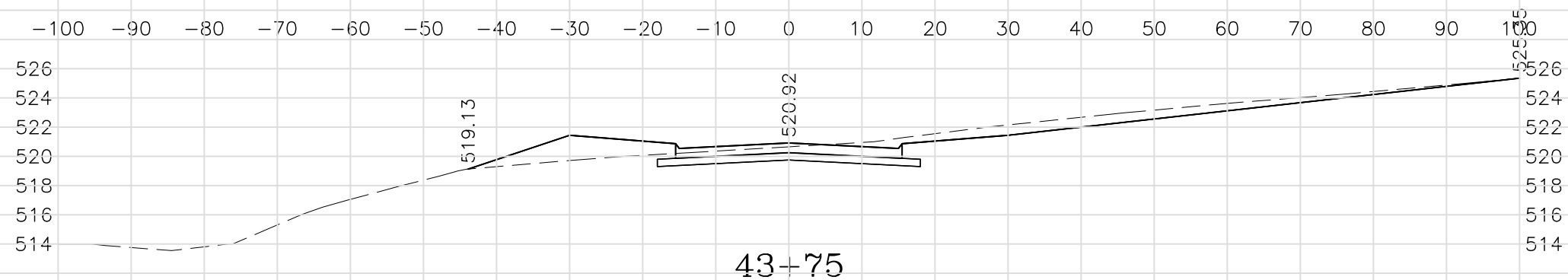

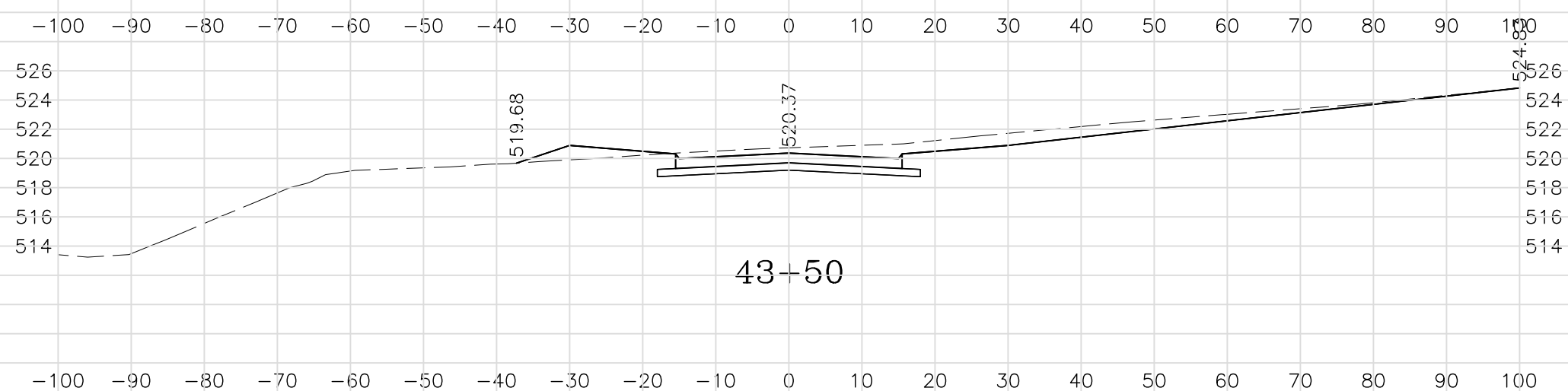

PROJECT NO: HX0789	DRAWN BY: BGA APPROVED BY: GMH DATE: 10/17/2012	NO.	REVISION DESCRIPTION	APPROVED	DATE	ALLTRANS, INC. 1930 St Andrews Ct NE Cedar Rapids, Iowa 52402 Phone: (319) 393-8726	Holy Cross Subdivision No. 3	Hickory Drive Cross Sections	SHEET NO. Y.04 OF Y.07

F:\ACAD\HX0789\dwg\HX0789-Sections.dwg 10-18-12 11:02:45 AM Ben Antons

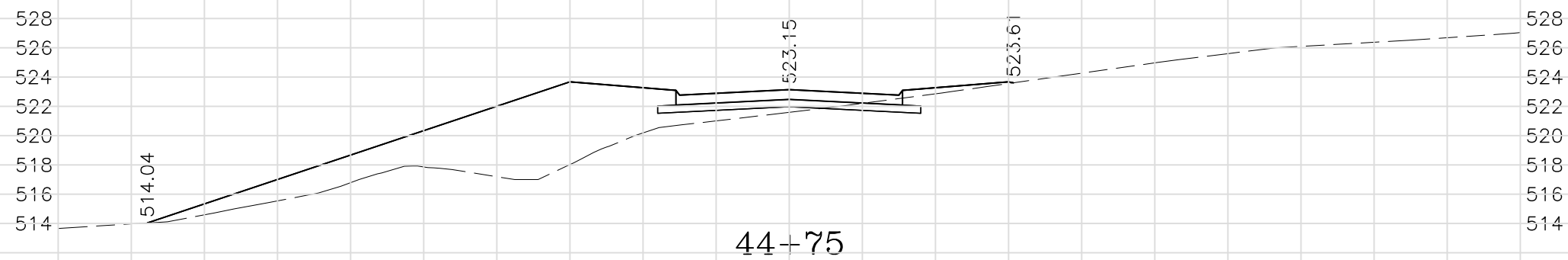

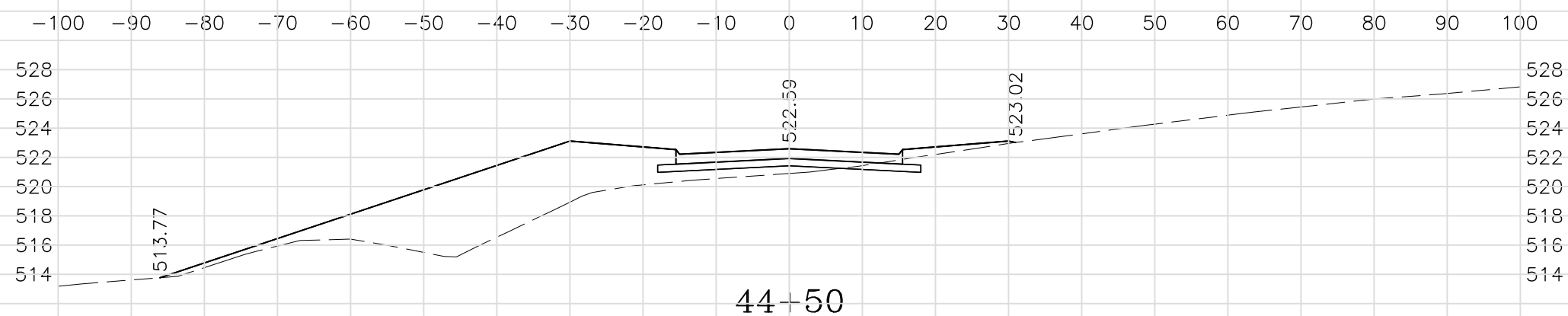

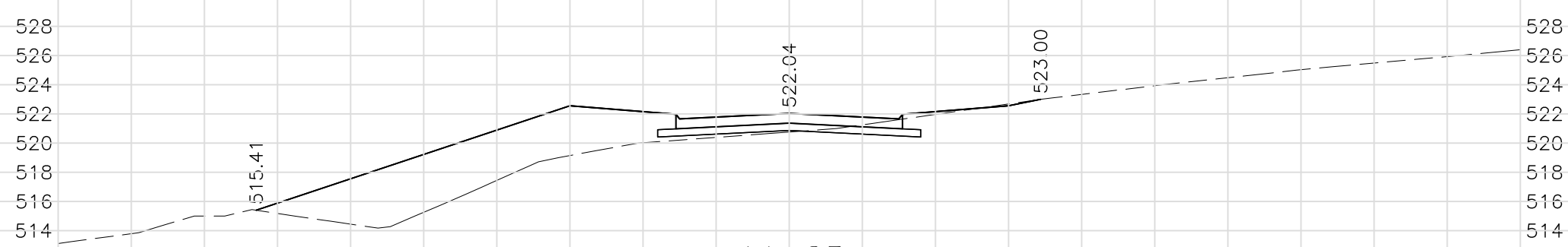

PROJECT NO: HX0789	DRAWN BY: BGA APPROVED BY: GMH DATE: 10/17/2012	NO.	REVISION DESCRIPTION	APPROVED	DATE	ALLTRANS, INC. 1930 St Andrews Ct NE Cedar Rapids, Iowa 52402 Phone: (319) 393-8726	Holy Cross Subdivision No. 3	Hickory Drive Cross Sections	SHEET NO. Y.05 OF Y.07

F:\ACAD\HX0789\dwg\HX0789-Sections.dwg 10-18-12 11:02:27 AM Ben Antons

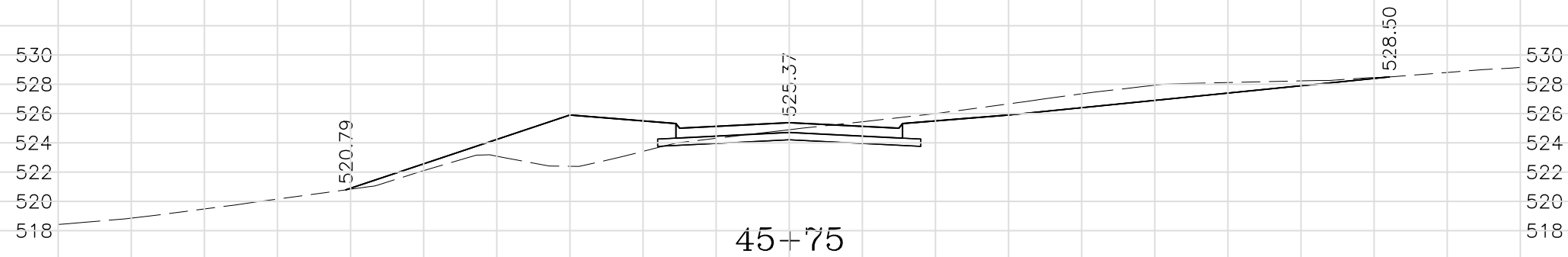

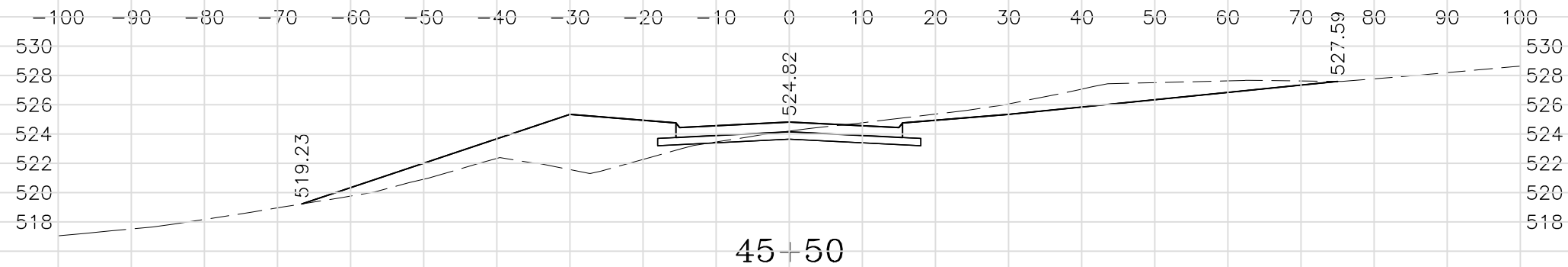

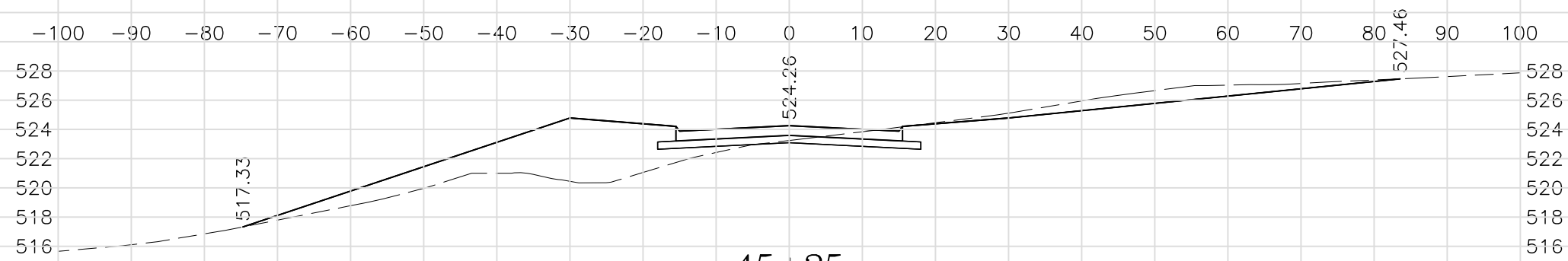

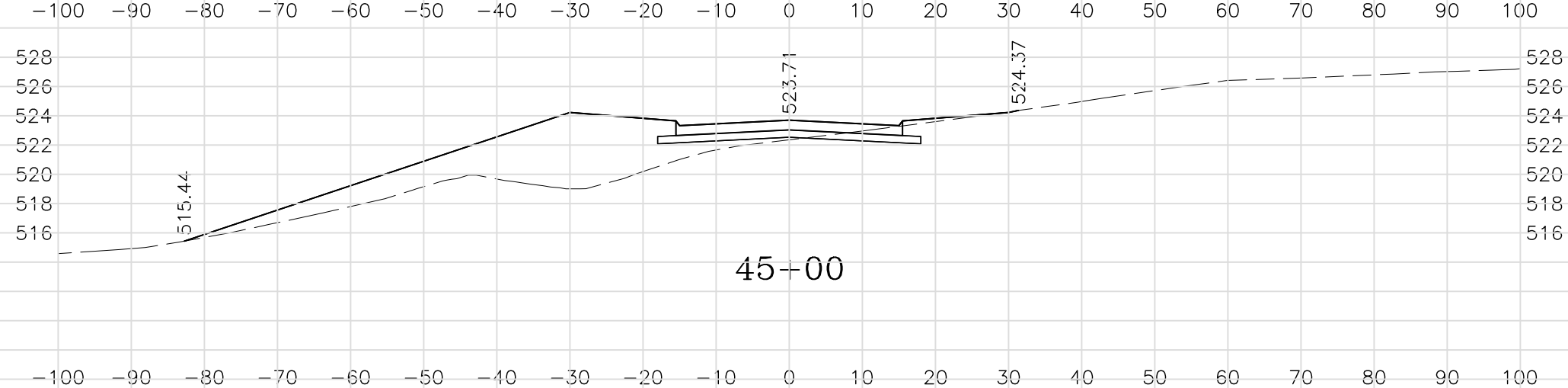

PROJECT NO: HX0789	DRAWN BY: BGA APPROVED BY: GMH DATE: 10/17/2012	NO.	REVISION DESCRIPTION	APPROVED	DATE	ALLTRANS, INC. 1930 St Andrews Ct NE Cedar Rapids, Iowa 52402 Phone: (319) 393-8726	Holy Cross Subdivision No. 3	Hickory Drive Cross Sections	SHEET NO. Y.06 OF Y.07

F:\ACAD\HX0789\dwg\HX0789-Sections.dwg 10-18-12 11:02:11 AM Ben Antons

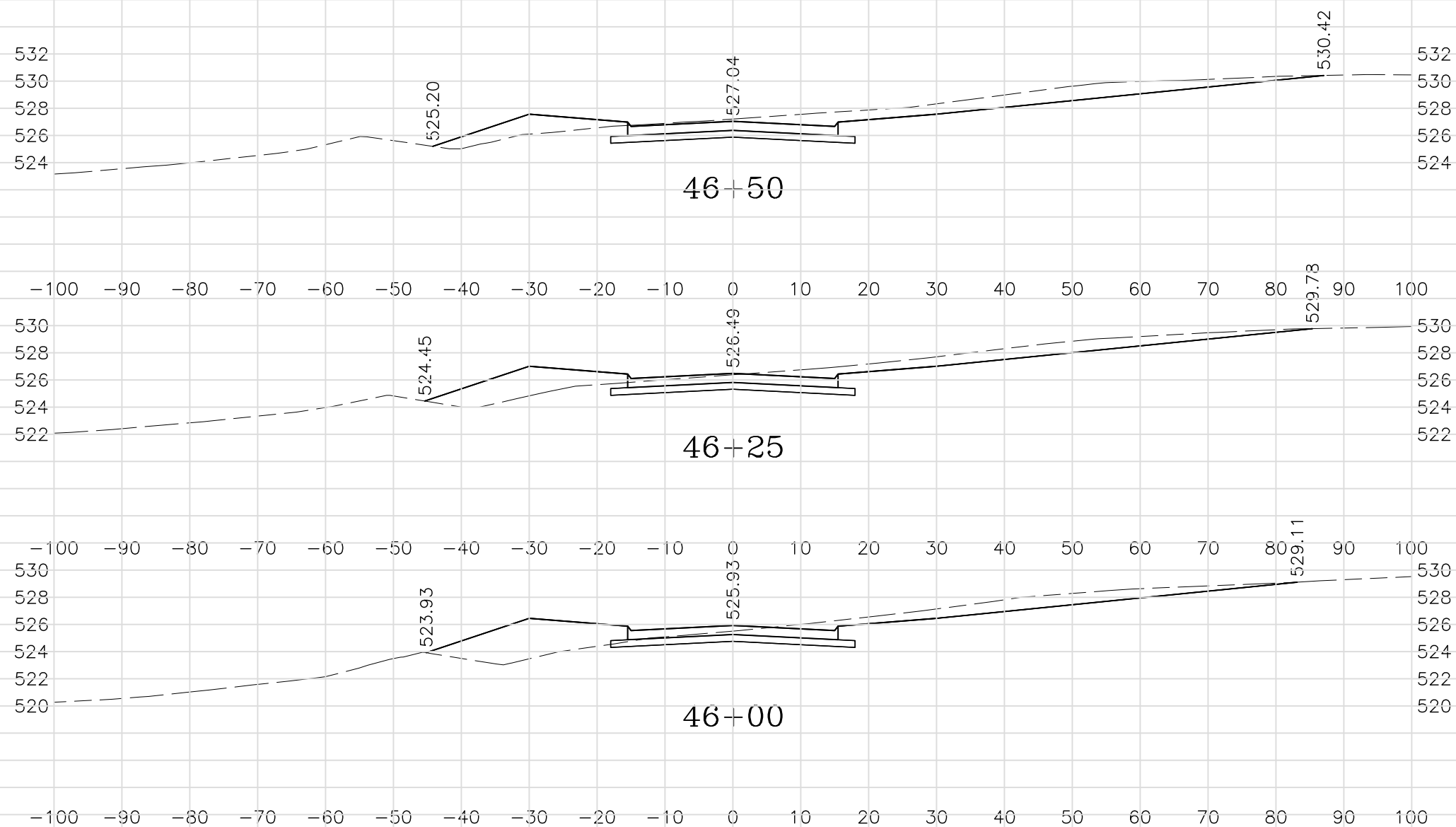

PROJECT NO: HX0789	DRAWN BY: BGA APPROVED BY: GMH DATE: 10/17/2012	NO. / REVISION DESCRIPTION / APPROVED / DATE	ALLTRANS, INC. 1930 St Andrews Ct NE Cedar Rapids, Iowa 52402 Phone: (319) 393-8726	Holy Cross Subdivision No. 3	Hickory Drive Cross Sections	SHEET NO. Y.07 OF Y.07

F:\ACAD\HX0789\dwg\HX0789-Sections.dwg 10-18-12 11:01:58 AM Ben Antons

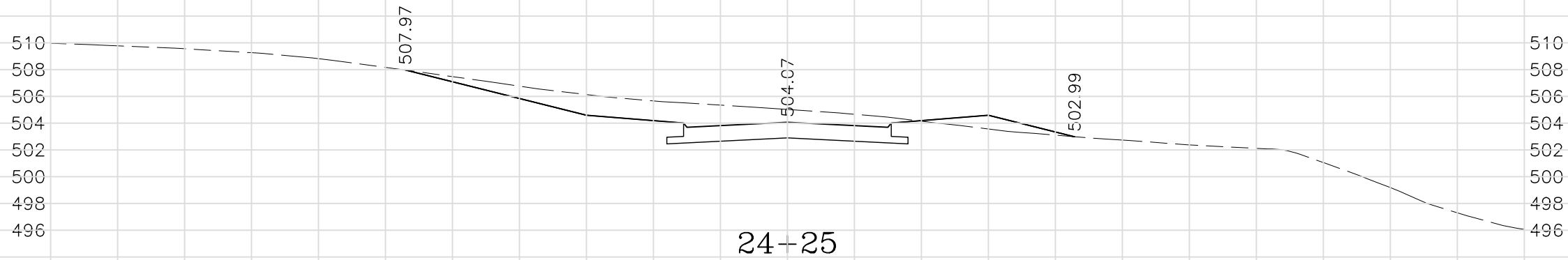

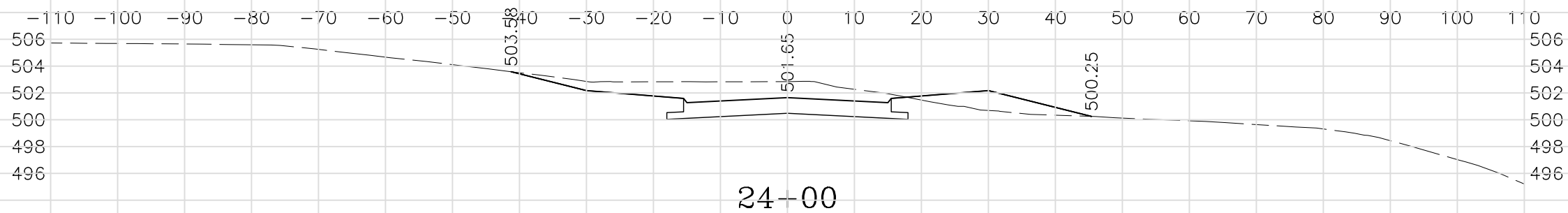

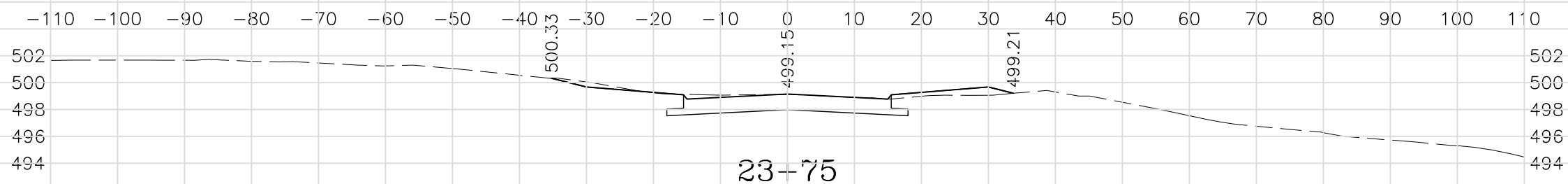

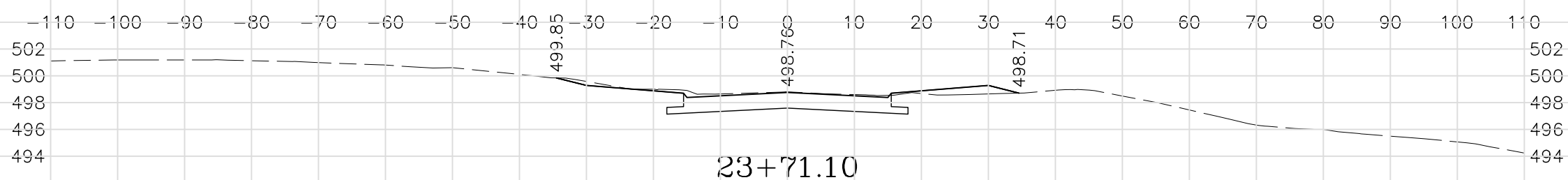

PROJECT NO: HX0789	DRAWN BY: BGA APPROVED BY: GMH DATE: 10/17/2012	NO.	REVISION DESCRIPTION	APPROVED	DATE	ALLTRANS, INC. 1930 St Andrews Ct NE Cedar Rapids, Iowa 52402 Phone: (319) 393-8726	Holy Cross Subdivision No. 3	Anna Street Cross Sections	SHEET NO. Z.01 OF Z.04

F:\ACAD\HX0789\dwg\HX0789-Sections.dwg 10-18-12 11:17:24 AM Ben Antons

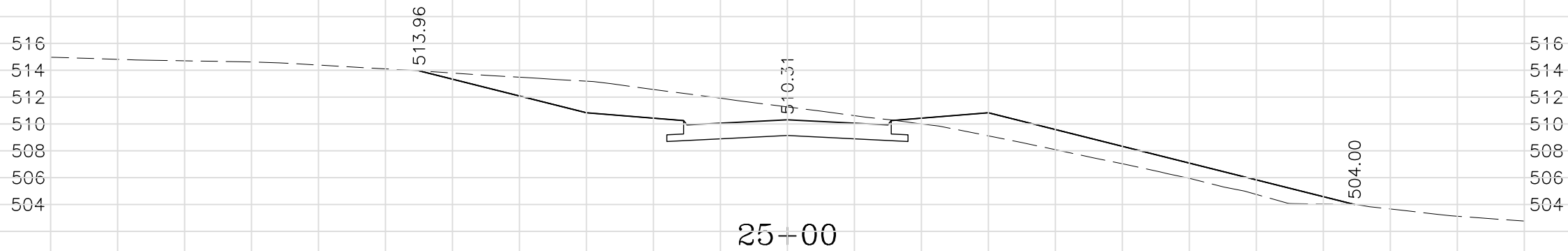

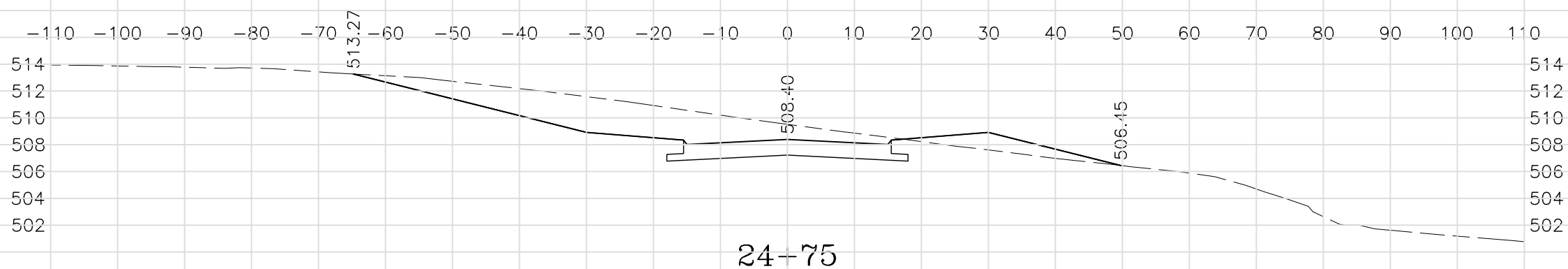

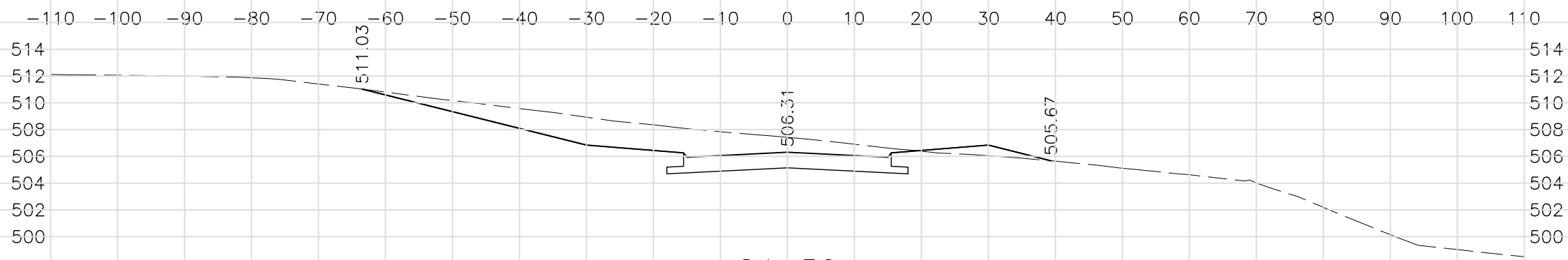

PROJECT NO: HX0789	DRAWN BY: BGA APPROVED BY: GMH DATE: 10/17/2012	NO.	REVISION DESCRIPTION	APPROVED	DATE	ALLTRANS, INC. 1930 St Andrews Ct NE Cedar Rapids, Iowa 52402 Phone: (319) 393-8726	Holy Cross Subdivision No. 3	Anna Street Cross Sections	SHEET NO. Z.02 OF Z.04

F:\ACAD\HX0789\dwg\HX0789-Sections.dwg 10-18-12 11:17:41 AM Ben Antons

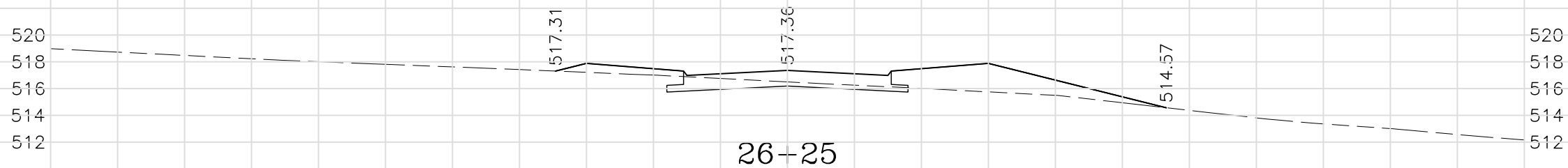

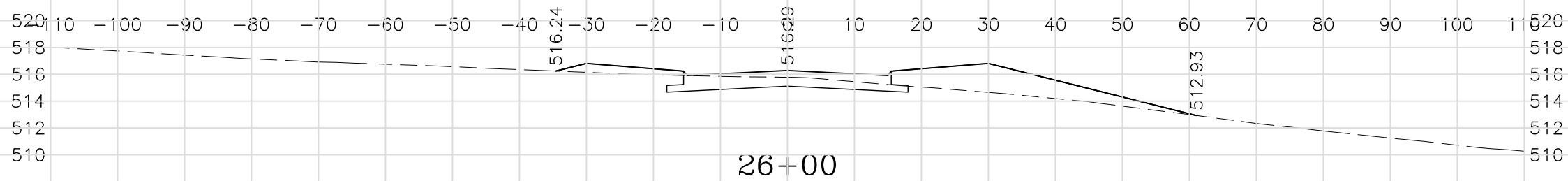

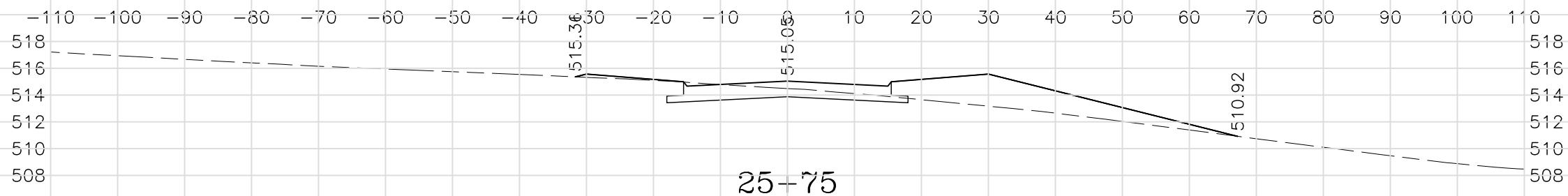

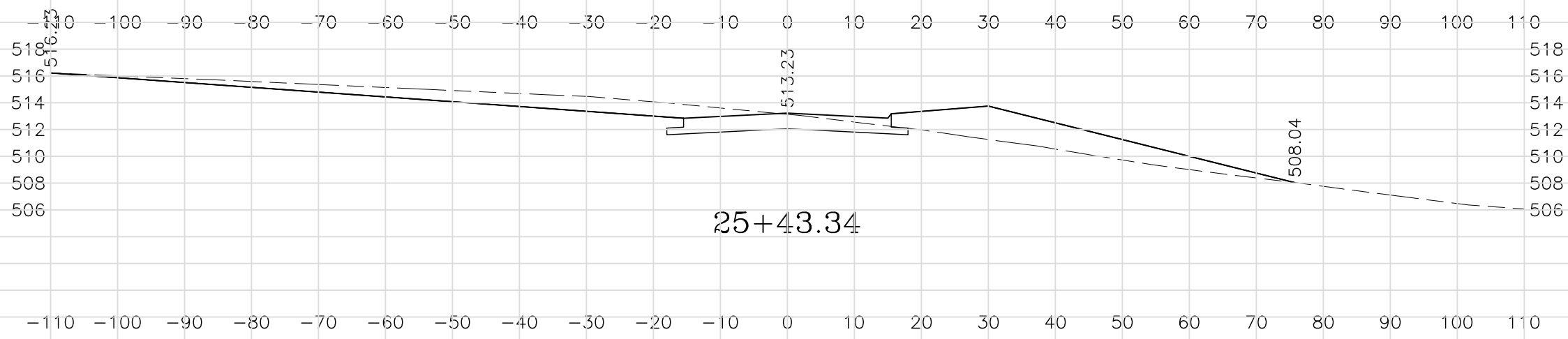

PROJECT NO: HX0789	DRAWN BY: BGA APPROVED BY: GMH DATE: 10/17/2012	NO.	REVISION DESCRIPTION	APPROVED	DATE	ALLTRANS, INC. 1930 St Andrews Ct NE Cedar Rapids, Iowa 52402 Phone: (319) 393-8726	Holy Cross Subdivision No. 3	Anna Street Cross Sections	SHEET NO. Z.03 OF Z.04

F:\ACAD\HX0789\dwg\HX0789-Sections.dwg 10-18-12 11:17:57 AM Ben Antons

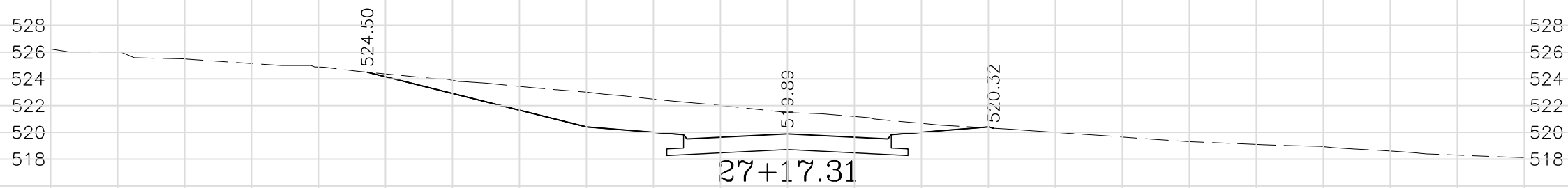

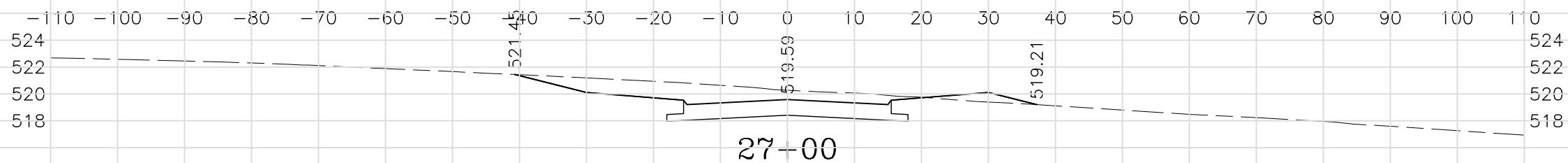

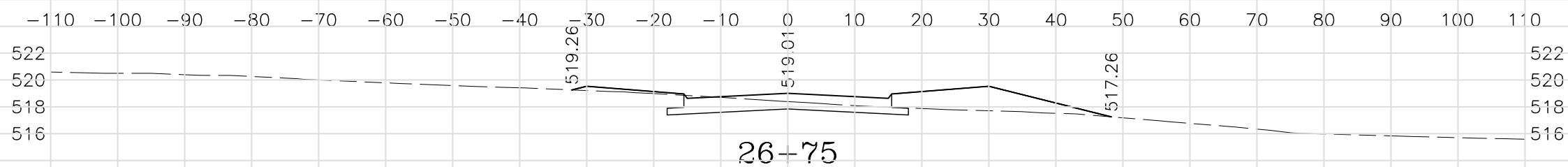

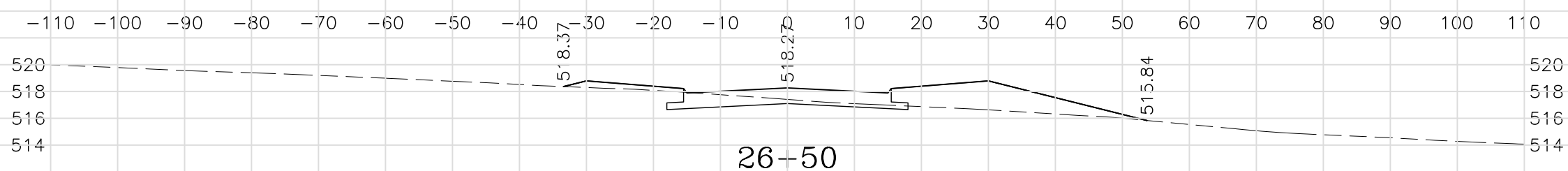

PROJECT NO: HX0789	DRAWN BY: BGA APPROVED BY: GMH DATE: 10/17/2012	NO.	REVISION DESCRIPTION	APPROVED	DATE	ALLTRANS, INC. 1930 St Andrews Ct NE Cedar Rapids, Iowa 52402 Phone: (319) 393-8726	Holy Cross Subdivision No. 3	Anna Street Cross Sections	SHEET NO. Z.04 OF Z.04

F:\ACAD\HX0789\dwg\HX0789-Sections.dwg 10-18-12 11:18:12 AM Ben Antons