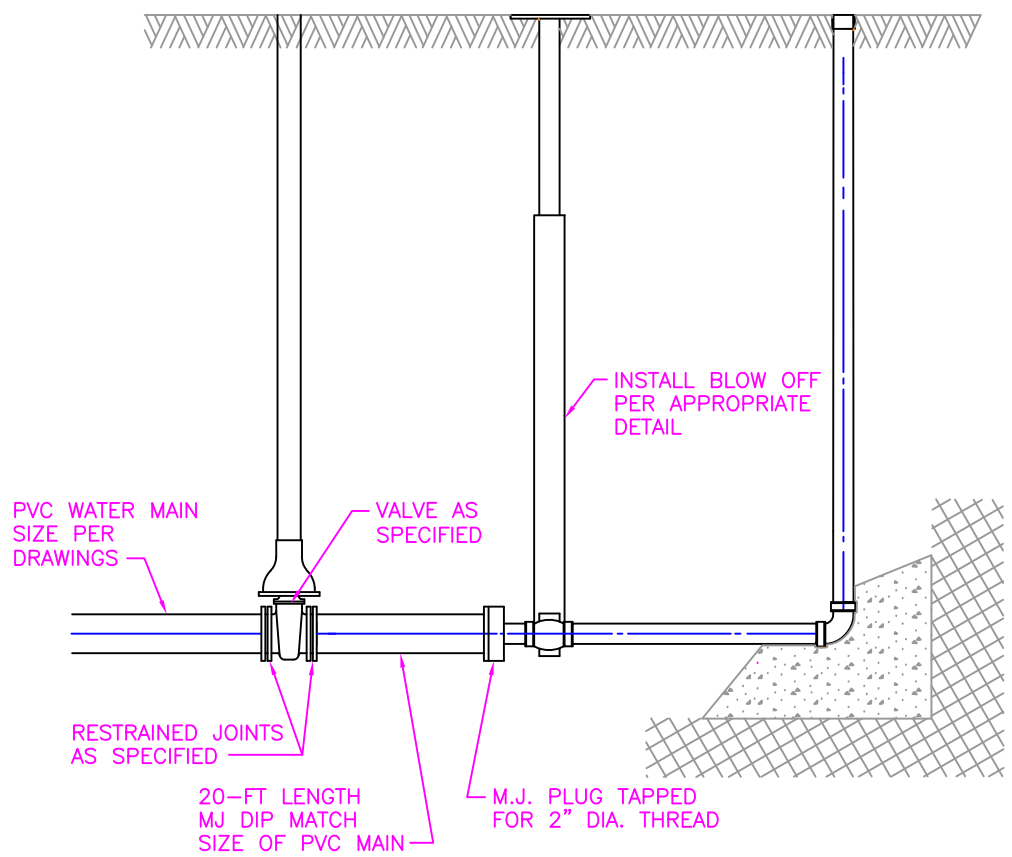

FILE NO.: 2500-020	CEDAR RAPIDS METROPOLITAN AREA STANDARD DETAILS FOR PUBLIC IMPROVEMENTS
APPROVAL DATE: AUG 1999	
REVISION NO.:	DEAD-ENDS OF PVC WATER MAINS
REVISION DATE:	NO. 2500-020

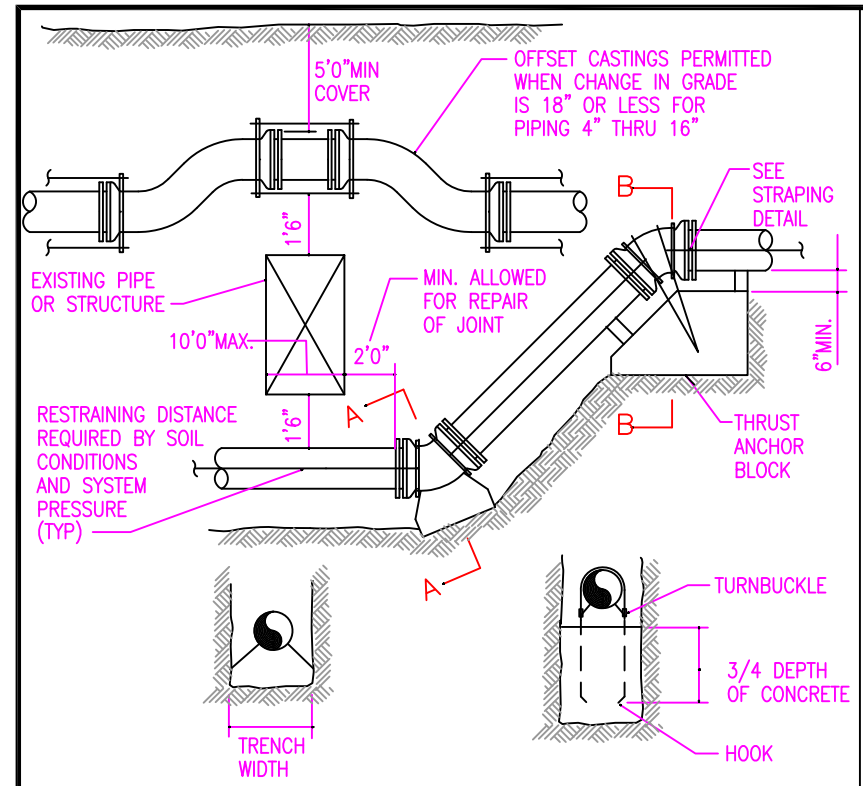

DETAIL FOR PRESSURE PIPE OFFSET

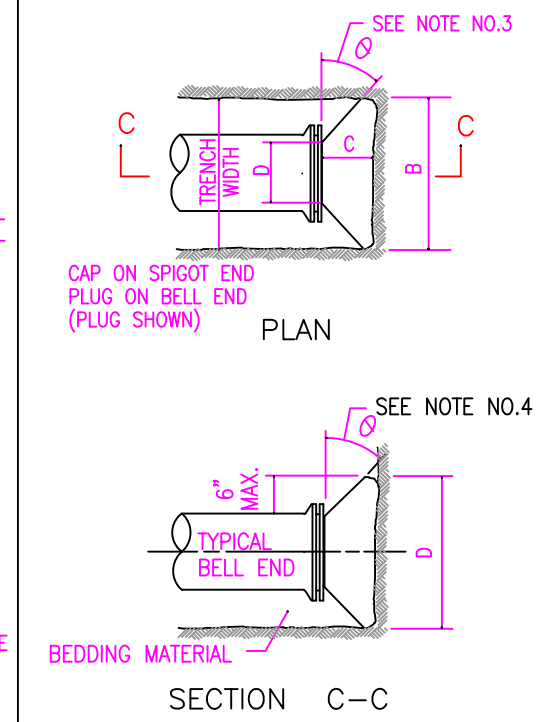

THRUST BLOCK DETAIL FOR DEAD END

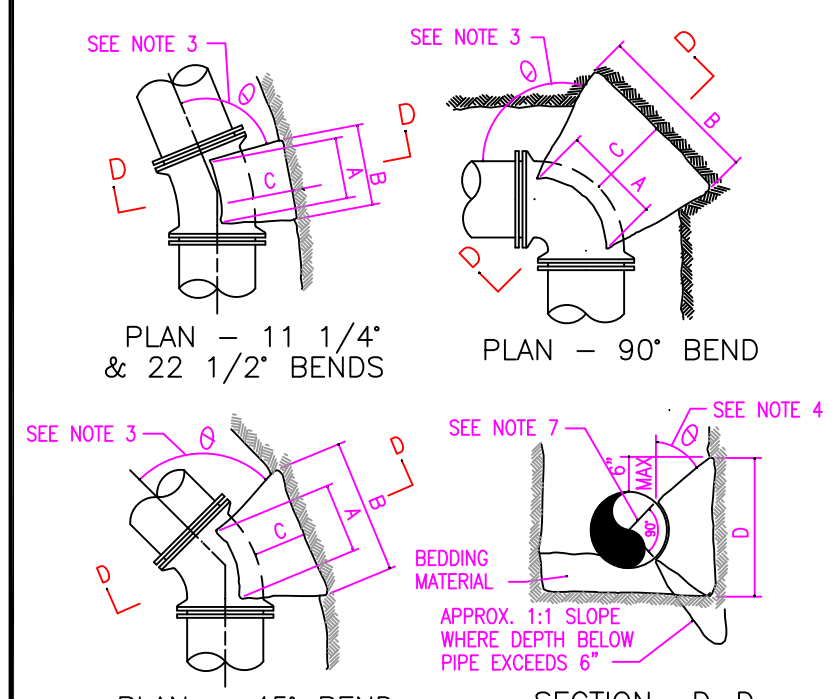

THRUST BLOCK DETAIL FOR BENDS

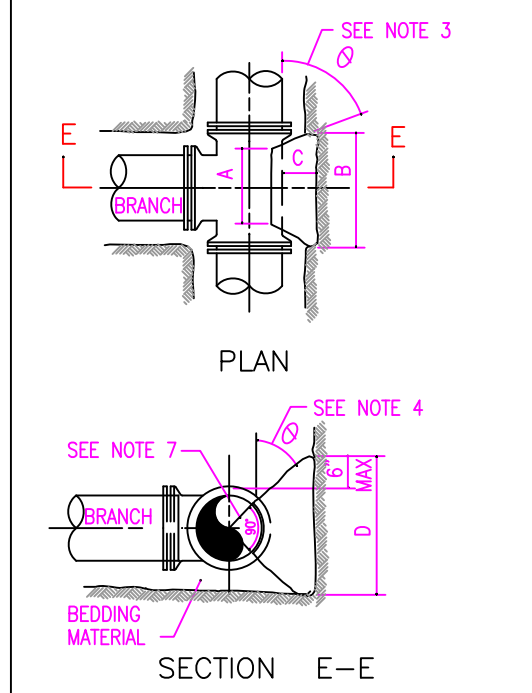

THRUST BLOCK DETAIL FOR TEES

FILE NO.: 2500-021	CEDAR RAPIDS METROPOLITAN AREA STANDARD DETAILS FOR PUBLIC IMPROVEMENTS
APPROVAL DATE: APRIL 1999	
REVISION NO.:	THRUST RESTRAINT DETAILS - SHEET 1 OF 4
REVISION DATE:	NO. 2500-021

F:\ACAD\HX0789\dwg\HX0789-B2.dwg 10-25-12 10:45:27 AM Ben Antons

PROJECT NO: HX0789	DRAWN BY: BGA APPROVED BY: GMH DATE: 10/10/2012	NO. / REVISION DESCRIPTION / APPROVED / DATE	ALLTRANS, INC. 4403 1st Avenue S.E. Cedar Rapids, Iowa 52402 Phone: (319) 393-8726

City of Holy Cross Subdivision No.3
Dubuque County, Iowa

Legend, Standard Details, And Bench Mark Information

SHEET NO. B.09 OF B.17